Bluff Slumping

GB
450.2
.B65
1982

Proceedings of the 1982 Workshop

Sponsored by
U.S. Geological Survey and Michigan Sea Grant

GB450.2.B65 1982 c.1

PROCEEDINGS

BLUFF SLUMPING WORKSHOP

Romulus, Michigan
February, 1982

Sponsored by

Michigan Sea Grant
The Earth Sciences Assistance Office of the
United States Geological Survey

US Department of Commerce
NOAA Coastal Services Center Library
2234 South Hobson Avenue
Charleston, SC 29405-2413

MICHU-SG-82-901

Michigan Sea Grant
Publications Office
2200 Bonisteel Boulevard
Ann Arbor, Michigan 48109

This publication is a result of work sponsored by the Michigan Sea Grant Program, Project R/CE-4, with a grant NA-80AA-D-00072, from the Office of Sea Grant, National Oceanic and Atmospheric Administration (NOAA), U.S. Department of Commerce and funds from the State of Michigan.

TABLE OF CONTENTS

I. Introduction

II. State-of-the Art Papers

A. Causes & Mechanics of Coastal Bluff Recession in the Great Lakes - T. Edil 1
B. Methods of Preventing Bluff Recession - E. Brater 51

III. Selected Papers

A. Assessment of the Effectiveness of Corrective Measures in Relation to Geological Conditions and Types of Slope Movement J. N. Hutchinson 61
B. Regulations to Reduce Coastal Erosion Losses - D. A. Yanggen 87

IV. Summaries of Workshop Discussion Groups

A. Problem Identification & Assessment 109
B. Controlling Factors 111
C. Mitigation Measures 112

V. Research Needs 117
VI. Public Dissemination 121

VII. List of Workshop Attendees 125

VIII. Additional Sources of Information 129

Problems of Great Lakes Bluff Erosion

Coastal erosion in the Great Lakes has resulted in public and private costs through loss of property and damage to structures, construction of protective devices, and public diaster relief and recovery expenditures. An estimated two-thirds of Great Lakes shoreline property owners have experienced some type of erosion damage. A key factor in shoreline erosion is bluff slumping. The U.S. Army Corps of Engineers estimated that 150,716 M^3 of Great Lakes bluffs were eroded between 1972 and 1976. A total of 41,196 residences lie within 60 M of a bluff edge. In Michigan alone, 80 houses were destroyed between 1974 and 1978, and an estimated 800 more were in imminent danger.

Although the effects of bluff slumping are often substantial, there had been no workshop for researchers which focused on the role of groundwater seepage and other geologic, hydrologic, and engineering factors in Great Lakes bluff stability until Michigan Sea Grant, in conjunction with The Earth Sciences Assistance Office of the U.S. Geological Survey, held such a workshop on bluff slumping in mid-February. The goal of this workshop was to improve management of coastal hazards by increasing professional and public knowledge of the role of groundwater and other elements which affect ground stability. The Bluff Slumping Workshop brought together engineers, geologists, hydrologists, and other scientists who specialize in slope stability. The objective was to assess the present scientific and technical knowledge dealing with bluff slumping and its mitigation and to determine further research and data collection needs.

The workshop was developed around two state-of-the-art papers dealing with causes and mechanics and mitigation and prevention. Participants dealt with questions of problem identification, assessment, controlling factors, mitigation methods, and research needs.

Results of the workshop will be published by the end of June. Copies can be obtained by requesting the Proceedings of the Bluff Slumping Workshop from: Publications, Michigan Sea Grant Program, 2200 Bonisteel Blvd., Ann Arbor, MI 48109.

STATE-OF-THE-ART PAPERS

CAUSES AND MECHANICS OF COASTAL BLUFF RECESSION IN THE GREAT LAKES

prepared by

Tuncer B. Edil

Department of Civil and Environmental Engineering
University of Wisconsin-Madison

CAUSES AND MECHANICS OF COASTAL BLUFF RECESSION IN THE GREAT LAKES

The State-of-the-Art-Paper

by Tuncer B. Edil
Department of Civil and Environmental Engineering
University of Wisconsin-Madison

Proceedings of the Workshop on Bluff Slumping in the Great Lakes

February 18-19,1982
Detroit, Michigan

INTRODUCTION

This paper presents a review of the literature available on the causes and mechanics of coastal recession in the Great Lakes with the purpose of delineating the most likely role and significance of various factors such as wind and wave action, composition of bluff materials, ground water, and vegetal cover. Theoretical information and the reports of investigators working on coastal slope stability problems in other regions were also used as needed in order to clarify the issues.

The physical characteristics, use, and ownership of the Great Lakes shoreline and the scope and economic impact of the coastal erosion, flooding, and bluff slumping problems have been documented in some detail (International Joint Commission, 1973; U.S. Army, Corps of Engineers, 1971; Environment Canada, 1975; Great Lakes Basin Commission, 1981). Table 1 gives a summary of these characteristics (International Joint Commission, 1973). Nearly 65 percent (10,444 km) of the 16,047 km-long Great Lakes shoreline is designated as having significant erosion with about 5.4 percent (860 km) of it being critical. The total damage to

the United States shoreline of the Great Lakes due to wave action during the high lake level period May 1951 through April 1952 is placed at about 50 million dollars (1952 price level) in the same report by the International Joint Commission.

Nearly 32 percent of the U.S. shoreline, not including the islands, consists of erodible bluffs (Table 2). Sand dunes are encountered in 8 per cent and erodible low plains in 17 per cent of the U.S. shoreline (Great Lakes Basin Framework Study: Appendix 12, 1975). Extensiveness of the shoreline formed in erodible bluffs and dunes and often complex response of this type of shoreline to wave erosion make slope processes an important part of the shore recession problem. The bluff processes encountered in the Great Lakes are described in the next sections. A discussion and comparison of the role and significance of the causes and processes follow it. Finally, the conclusions and the recommendations for further research are presented.

SLOPE PROCESSES

Slope movement is an expression of force overcoming resistance. Coastal bluffs are examples of systems in which force and resistance are continually opposed. This equilibrium is altered by changing environmental conditions that can initiate downslope movement. When the forces within a moving mass become less than the resistances to movement, the material will slow down and eventually stop.

Force requires energy and all energy in geomorphic systems is ultimately derived from either gravity or climate (Carson and Kirkby, 1972). The force provided by gravity is simply that of the weight of bluff forming materials including soil water and the external loads such as buildings, snow, piled materials, etc. placed on the bluff. To these forces can be added vibrations resulting from earthquakes, blasting and machines. The intensity of shear force is a function of gravity and it varies from point to

point in a bluff; however, the factors which control it, along a potential failure surface, include slope inclination, height and unit weight of slope forming materials and included water.

Climate, through its control on water, air, and temperature, provides energy for the most important forces on bluffs. Climate related forces include wind and wave action, surface and ground-water flow, rain impact, moisture and temperature related ground expansion, and ice action.

Resistance to these forces that tend to move materials down and/or away from the bluffs is provided primarily by the shear strength of these materials. Vegetation and man-made structural systems such as shore protection and bluff stabilization structures may provide additional resistance. Shear strength is not constant for a given material. It may change in time due to weathering and ground water pressure changes which are in turn controlled by certain climatic factors. Furthermore, use of certain technologies can improve shear strength of soils or minimize the detrimental effects of the climatic factors.

The interaction of driving force and soil resistance results in a number of processes leading to debris production and removal. Gray (1977) summarized debris production and removal processes and the involved variables in a diagram. Basically all processes are alike in that material begins to move only when the forces involved become greater than the resistances. Once movement has begun, the mode of interaction of force and resistance may differ greatly from one process to another and these differences are commonly used to classify geomorphic processes (Sharpe, 1938). The commonly encountered processes in the Great Lakes coastal bluffs include wave/current erosion, wind erosion, ice erosion, rain fall erosion (rain impact and sheet/rill erosion), ground water sapping, sliding/slumping, solifluction, debris flow, and creep.

It is possible to separate these processes into two broad groups, namely <u>mass movement</u> and <u>particle movement</u>. In the former group debris begins to move as a coherent unit.

If the movement of the mass is along a well-defined surface without internal shear (rigid body movement) it is termed slide (or slump). On the other hand, if the shear is distributed throughout the mass (viscous flow) without a sharply defined failure surface it is termed flow. In flows all the movement occurs as differential movement within the body of the flowing mass. Movements in which particles move as individuals, with little or no relation to their neighbors are particle movements. Distinction between these categories is often difficult. Nevertheless, some processes seem to be mainly particle movements, especially the erosional processes caused by waves, currents, rain, ground water, and winds (Carson and Kirkby, 1972).

The concepts presented above are summarized in Table 3. There are other geomorphic processes and there may be other ways of classifying these processes; but we are concerned with the processes most commonly encountered in the Great Lakes region here. In the next sections the nature of the various slope processes is described.

WAVE EROSION

Probably the most significant geomorphic process along the Great Lakes shoreline is the erosion and removal of shorelines materials by waves. Wave action is important both in itself and in initiating and perpetuating other geomorphic processes in those segments of the shoreline where bluffs are encountered. The nature and magnitude of wave erosion depends broadly on wave energy and erodibility of materials at a specific location along the shoreline. The wave energy available at a given point on the shoreline for erosion of beach and bluff materials depends on the following factors:

1. wave climate (wind velocity, duration and fetch)
2. water level relative to the beach and bluff toe
3. nearshore and offshore bathymetry
4. shore configuration (orientation)

These factors are not constant but instead change significantly with time. Most notable is the water level fluctuations in the Great Lakes.

Lake Levels

Records going back to 1860 indicate that the lake levels have varied considerably. Superimposed on the very long-term trends resulting from crustal tilting (about 0.52 m per century) and the seasonal fluctuations (as high as 1 m) are some extremely short periods of changes, of varying magnitudes (Tovell, 1977). The most temporary of these are caused by winds that blow along the long axis of a lake and drive the waters to one end. In Lake Erie wind set-ups have caused differences in water levels of more than 4 m between Buffalo, New York and Toledo, Ohio. A second cause of temporary changes is seiches, which are changes in lake levels due to differences in atmospheric pressure at different ends of a lake.

The Great Lakes also exhibit long-term water level changes without regular periods. The intervals vary from 10 to 30 years. The magnitudes of these long-term variations are three-and-a-half to six times greater than the average seasonal variations. These changes are associated with the changes in the volume of water in the lakes. Fig. 1 shows the regular seasonal cycle, with lowest levels in the late fall and winter months and highest levels in late spring and summer, along with the long-term fluctuation for the period 1952 to 1973. The volume of water is dependent upon the amount of precipitation over the lake, the amount of water delivered by rivers and streams flowing into the lake, the inflow from the lake above, the flow of groundwater into the lake, and any artificial diversion into the lake from outside the basin. The water is lost by evaporation, outflow (natural or artificial diversion), and withdrawal for municipal and industrial use.

The principal factor that determines the water budget in the lakes is climate. The periodic fluctuations in Great

Lakes water levels are largely due to the confined outlet conditions of the lakes combined with variations in climate, i.e. precipitation and evaporation. There is also a certain amount of regulation of the lake levels between the upper lakes and the lower lakes by controlling the water discharge through the dams at the lake outlets.

It has been generally accepted that the lake level fluctuation is the primary factor affecting the rate of shore erosion and the consequent bluff recession (Brater, 1975; Berg and Collinson, 1976; Carter, 1976; Seibel 1972; Davis et al., 1973; Quigley and Di Nardo, 1978; Zeman,1978). There is considerable local variation in erosion rates due to the presence of the controlling factors other than the lake level. Along shoreline segments with bluffs, slope processes also contribute to bluff recession usually with a complicated time lag relationship with respect to toe erosion. For these reasons it is not easy to correlate lake levels with erosion rates especially if the time period considered is short. Therefore, today, in spite of a wide perception that there is a direct influence of lake level on accelerated erosion, there is not a comprehensive study demonstrating this fact clearly and directly. Johnson and Hiipakka, (1976) even present a statistical study indicating the lack of correlation between the rate of erosion and lake levels. Nevertheless, available evidence, observations, and theoretical considerations (see International Joint Commission, 1973) all indicate that high lake levels play a passive role, as pointed out by Davis et al. (1973) in that they allow erosion to take place at a rapid rate.

Erodibility of Coastal Materials

The amount of wave erosion depends on the erodibility of coastal materials in addition to the wave energy delivered. Erodibility is largely a function of composition. The Great Lakes are surrounded by a wide variety of coastal types and deposits, although the coasts are generally dominated by Pleistocene glacial deposits. Each of the lakes has a

portion of its coast which is comprised of bedrock. In general, bedrock portions of the shoreline are most resistant to wave action. However, erosion in solid rock may present a potential hazard if unrecognized as reported by Phillips (1978) for the north and east shores of Lake Superior.

Most of the recent critical erosion is, however, confined to the coasts of unconsolidated sediments. These may be in the form of glacial till or outwash, lake sediments or dunes which are reworked from glacial sediments. In general cohesionless materials such as sand and silt are the most erodible materials with cohesive soils (clay, silty clay, etc.) having somewhat more resistance to wave erosion due to cohesion between the particles.

Presently there are analytical procedures available to evaluate wave climate at a specific site using numerical hindcasting procedures. There are a number of such procedures (Pierson et al., 1955; Sverdrup and Munk, 1957; Gelci et al., 1957; Bretschneider, 1958) and they produce the wave energy density spectrum at a deep water hindcasting site based on the wind data for the site. A representative wave height from the wave energy density spectrum may then be calculated. A wave entering the nearshore zone will be slowed, shortened, and steepened as it moves into progressively shallower water. This process is known as shoaling. Furthermore, a wave arriving at an angle to the shoreline will be bent toward alignment with the underwater depth contours, since that portion of the wave front bending is called refraction and shoaling (Dobson, 1967). The refraction analysis requires, together with the deep water wave heights and directions of propagation, the hydrographic information (bathymetry). These studies are useful for the design of shore protection structures and for estimating long shore currents, rip currents and sediment transport by littoral drift. Wave climate has been evaluated at different sites in the Great Lakes (Brater and Ponce Campos, 1978; Edil et al., 1979; Gelinas and Quigley, 1973; Resio and Vincent, 1976; Keillor and De Groot, 1978).

Rate and Amount of Wave Erosion

In summary, it can be stated that there are quantitative procedures developed to evaluate wave energy on a site-specific basis; however, the physical information used in the analysis involves a number of variables which are usually difficult to measure precisely and have a probabilistic nature. Therefore, extensive field calibration of the analytical procedure is required for a realistic evaluation. Furthermore, the relationship of wave energy to the rate and amount of shore and bluff-toe erosion has not been satisfactorily established. Quigley and Gelinas (1976) reported an approximately linear relationship between the 150-year erosion rate and break wave energy. However, a closer examination of their data shows poor linearity and wide scatter. Nevertheless, a qualitative general trend for increasing erosion rate with increasing wave energy is apparent. Berg and Collinson (1976), based on a detailed study of bluff recession at more than 21 sites on the Illinois shore of Lake Michigan, suggested that serious bluff erosion from wave attack becomes significant beyond a threshold lake level. They also noted the time lag between lake level drop or rise and recession rate.

In another study Fisher et al. (1975) tried to correlate wave energy (expressed as wave height) with shoreline change for a segment of the Atlantic coast. He found promising qualitative but poor quantitative correlation on a regional scale. The correlations improved somewhat on the local scale. This shows that local conditions are significant in controlling recession rates and wave energy but it is only one of the factors involved. This latter study involved a shoretype with sand dunes. When high bluffs formed in cohesive soils are present the recession is further complicated by landslide activity that makes such correlations even more difficult especially when a relatively short time period is considered.

Wave action, as a geomorphic process, is the primary factor responsible for the changes in slope geometry on

coastal bluffs. The effect of wave action on the bluff takes place in an active and/or passive manner. In the former, waves directly attack and erode the intact native toe material resulting in steepening of slopes, initiation of slides, loss of vegetation, and other surficial slope processes. In the passive case, wave action causes the removal of material which may collect at the toe and on the beach. This material may be contributed from the bluff face due to free degradation or slides in the upper parts of the bluff (termed colluvium). In the passive case, the effect of wave action is to perpetuate instability by preventing the flattening and stabilization of the bluff by natural processes. However, after sufficient recession and stabilization a bluff would not be affected by this type of wave activity barring an increase in wave activity from the statistical average such may be induced by, for example, increasing lake level.

SLIDING/SLUMPING

The processes of downslope movement what geomorphologists refer to as mass wasting or mass movements, includes many types of movement. An earlier and widely accepted engineering classification referred to these processes as landslides (Varnes, 1958). A recent update of the same classification adopts the term "slope movements" (Varnes, 1978). The chief criteria used in this classification are type of movement primarily and type of material secondarily (Table 4). Types of movement are divided into five main groups: falls, topples, slides, spreads, and flows. A sixth group, complex slope movements, includes combinations of the other five types. Materials are divided into rock and soil and soil is further divided into debris (coarse-grained) and earth (fine-grained). Any of these slope movements may occur along the Great Lakes shoreline. However, slides (both rotational and translational) and flows (including solifluction) are two

types of movement that are encountered most commonly and will be addressed herein. Falls in oversteepened bluffs have also been observed and Quigley and Gelinas (1976) report a toppling failure. These processes do not lend themselves to quantitative analysis and furthermore, are not encountered on a wide-spread basis.

Shear Strength Behavior of Soils

It is appropriate to discuss the shear strength behavior of soils briefly since it is one of the important factors which control the occurence and mode of sliding. The Mohr-Coulomb criterion is most widely used to define shear failure in soils. According to this criterion the shear strength can be expressed consistently in terms of effective normal stress (σ') acting on the failure surface as

$$s = c' + (\sigma - u) \tan\phi' = c' + \sigma' \tan\phi' \qquad (1)$$

where c' and ϕ' are the effective (or drained) strength parameters: cohesion intercept and angle of internal friction, respectively. There are two parts, in general, to shear strength: a constant cohesional part and a variable frictional part. The effective strength parameters and the unit weights of the materials encountered in the bluffs of the Great Lakes shorelines are compiled in Table 5 from the published reports of various investigators.

Effective stress (σ') is defined as

$$\sigma' = \sigma - u \qquad (2)$$

where σ is total normal stress and u is pore-water pressure. Total stress is generated by gravity. Therefore, it increases generally in a linear fashion with depth in a soil mass and it is a function of the unit weight of the soil (γ). Unit weight of soil depends on its density (void ratio), specific gravity of the solids, and the degree of saturation.

The actual stress at any point within the soil will depend on the distribution of stresses between the liquid and solid phases for a saturated soil. The water pressure within the soil pores is termed pore-water pressure. In general, pore pressure consists of two parts: one is related to static or flowing ground water and the other is the pore pressure change (excess pore pressure or pore pressure deficiency) resulting from changing stresses. Placing a load on the soil surface, making an excavation in soil, removal of part of the slope materials by erosion and slips all cause changes in the state of stress (both normal and shear stresses) at different points in the soil mass. As soil tends to contract or dilate in response to these stress changes, a change in pore pressure occurs. Therefore, as the pore pressure changes in response to ground-water levels and/or in response to stress changes in the soil, the effective stress and consequently the shear strength changes at a given point in the soil mass.

Water flows in and out of a soil element on a potential failure surface as the pore pressure changes at the point. In the case of granular soils (sands and gravels) this flow and adjustment of pore pressure takes place rapidly (as rapidly as it is induced) due to high permeability of such materials. In soils containing significant quantities of fine-grained material (clay and silt), however, there is a delay in response to pore pressure changes due to low permeability.

Effective Stress Method (Long-Term Stability)

In the case of natural slopes stability is usually considered as a long-term problem. The long-term stability analysis is performed using the effective stress computed by subtracting the pore pressure related to ground water from the total stress and assuming that the pore pressure change due to stress changes will be dissipated in the long-term and will be equal to zero. Coastal bluffs are in constant evolution due to the combined effects of toe erosion, slides, and face degradation. These processes, in general, cause a

decrease in total lateral normal stress and increase shear stresses along potential failure surfaces accompanied by a decrease in pore pressure. Subsequently the soil swells as water flows into this zone and shear strength decreases with time. This situation becomes more critical as the overconsolidation of clays increases.

Therefore, the long-term stability should be considered in terms of effective stresses and assuming drained conditions for the coastal bluffs formed in stiff clays of the Great Lakes region. The effective stress method is also used in well-drained granular soils in which the short and long-term stabilities coincide due to the immediate dissipation of pore pressure changes. Edil and Vallejo (1977) described bluff stability at two sites on the shore of Lake Michigan. Where unexpected stability occurred, it could be explained in a rational manner by this process of delayed failure. Analyses of short-term stability tended to indicate stability while long-term stability analyses indicated instability or low stability. Quigley and Gelinas (1976) analyzed the stability of a typical bluff of clay till having a height of 40 m and an increasing amount of toe-material being removed. An analysis of their results assuming short-term and undrained conditions indicates that nearly 52 m of toe erosion is required to initiate an immediate failure. This is unlikely. On the other hand, about 20 m of erosion (a reasonable possibility), whether it occurs all at once or gradually, creates instability in the long-term analysis.

Rotational Slides (Slumps)

In slides, the movement consists of shear strain and displacement along one or several surfaces that are visible or may reasonably be inferred, or within a relatively narrow zone (Varnes, 1978). Slides are subdivided into rotational slides (slumps) and translational slides. The former is a slide along a surface of rupture that is curved concavely upward. In many slumps this surface is spoon-shaped and the

movement is more or less rotational about an axis that is parallel to the slope. The classic purely rotational slump on a surface of smooth curvature is relatively common in fairly homogeneous materials such as constructed embankments and fills. Slides in natural slopes tend to be complex or are at least controlled in their mode of movement by internal inhomogeneities and discontinuities such as the presence of a very weak layer or fractures. Barring the presence of such gross inhomogeneities, rotational slides involving approximately circular rupture surfaces have been observed and analyzed in the Great Lakes bluffs formed in cohesive soils (Quigley and Tutt, 1968; Edil and Vallejo, 1977; Edil and Haas, 1980).

Deep-seated rotational slips occur in clayey soils and do not occur in sands. One method of analysis of rotational slides that is accurate for most purposes is that advanced by Bishop (1955). The forces acting on a typical slice of the slumping mass is shown in Fig. 2. From a consideration of the moment equilibrium about the center of rotation, the equation for safety factor (F) is obtained:

$$F = \frac{\Sigma\{[c'b + (W-ub)\tan\phi'](1/m_\alpha)\}}{\Sigma W \sin\alpha} \tag{3}$$

where

$$m_\alpha = \cos\alpha[1 + (\tan\alpha \tan\phi')/F \tag{4}$$

Safety factor is defined as the ratio of the available shearing resistance along a given slip surface to the calculated shearing resistance required for equilibrium. In other words, it is that factor by which the shear strength parameters may be reduced in order to bring the slope into a state of limiting equilibrium along a given slip surface. A value of F equal to unity indicates failure with values greater than unity indicating increasing degrees of safety. Normally a number of circles are examined to locate the most critical circle with the lowest factor of safety. The

failure arc predicted by the Bishop method has been found to compare well with actual failure surfaces in bluffs on the Great Lakes (Edil and Vallejo, 1977) and other places (Sevaldson, 1956).

Vallejo and Edil (1979) developed stability charts for rapid evaluation of the state of stability of actively evolving Great Lakes coastal slopes using the effective stress approach and the Bishop method. These charts indicate the stability status as well as the type of potential failure, whether deep or shallow, to which the bluffs may be subjected. The geometric changes that the bluffs will be subjected to before becoming stable can be discerned from the charts. An example of these charts is given in Fig. 3. The family of curves represents height-inclination combinations for the limiting long-term safety factor of unity with respect to a deep-slip type of failure. Skempton and Hutchinson (1969) defined the deep slip failures as the ones having values of the ratio between the maximum thickness of the slide, D, and the maximum length of the slide, L, ranging from 0.15 to 0.33 (Fig. 4). The slopes with height-inclination combinations falling within Zone A are unstable slopes with potential deep slips in the long-term. The stable angle below which no more rapid mass movement will take place (except perhaps creep) is given by the ultimate angle of stability (β_u) (Skempton and DeLory, 1953). This angle defines the upper limit of Zone C of stable slopes. A slope which is in Zone B (between Zones A and C) will experience shallow failures. The shallow failures are defined by Skempton (1953) as those having values of D/L between the limits of 0.03 and 0.05. The shallow slips could be planar slides (slab slides), small rotational slips, and flows. For this reason, the slopes in Zone B can be classified as stable slopes with local instability or quasi-stable slopes.

Influence of Slope Parameters on Stability of Bluffs

Edil and Vallejo (1980) made a theoretical study of the

influence of slope parameters on the long-term stability of the coastal bluffs. Based on this analysis, various slope parameters are involved in the following ways:

a) the cohesive component of the shear strength of soil is the dominant factor providing resistance to failure for slopes with heights less than about 25m.
b) the friction component is the dominant factor for slopes greater in height than about 25m.
c) an increase in ground-water level produces an overall decrease in the safe slope angle at any height.
d) a high slope (greater than 25m) will reach unstable conditions faster than a low slope if the two slopes are steepened equally.
e) unit weight influences slope stability differently depending upon the position of the ground-water table. For low ground-water levels (less than one quarter of the slope height measured from the slope base) slopes of lower unit-weight materials are more stable; for high water levels (more than three quarters of the height measured from the slope base) higher unit weight materials yield more stability. For intermediate water levels the effect of unit weight depends on the slope height.

For a given slope most of these parameters, such as height and materials (c', ϕ', and γ) are fixed. The ones which are likely to vary with changing environmental conditions are inclination and ground-water level. Fig. 3 shows the effect of slope inclination on the stability in terms of height and cohesion intercept for fixed angle of friction, unit weight and ground-water level. The nature of the relationship varies only quantitatively for different values of the latter parameters. Fig. 5 shows the height-inclination relationships at limit equilibrium conditions for different relative ground-water levels, H_w, and different values of ϕ' for constant c' and γ. An increase in H_w from 1/4 to 3/4 of the slope height has a significant effect on reducing critical slope inclination at a given slope height. This trend demonstrates the need for accurate assessment of the

ground-water conditions when considering the stability of bluffs as well as the effectiveness of slope drainage in improving the stability against deep-seated slumps.

Translational Slides

In translational slides the mass progresses down and out along a more or less planar or gently undulating surface and has little of the rotational movement or backward tilting characteristic of slump. A translational slide in which the moving mass consists of a single unit that is not greatly deformed or a few closely related units may be called a block slide. An example of such a failure involving a block of fractured till in the upper part of a coastal bluff in Milwaukee County, Wisconsin was reported by Sterrett and Edil (1982). The forces acting on such a block is shown in Fig. 6. The safety factor is given as

$$F = \frac{c'B/\cos\psi_p + (W\cos\psi_p - U - V\sin\psi_p)\tan\phi'}{W\sin\psi_p + V\cos\psi_p} \qquad (5)$$

The movement of translational slides is commonly controlled structurally by surfaces of weakness, such as faults, joints, bedding planes, and variations in shear strength between layers of bedded deposits, or by the contact between firm bedrock and over lying detritus. It is evident that the proportions of block slides are controlled largely by the spacing of the discontinuities which bound the block, and D/L ratios thus vary widely.

Translational slips can also occur in a homogeneous soil mass. In particular, granular materials such as sand and gravel fail in surface ravelling and shallow slides with the failure surface parallel to the slope surface. Similar failures occur in a mantle of weathered or colluvial (granulated) material on clayey slopes and are referred as slab slides. An infinite slope analysis is often representative of such failures. In this analysis, the slip surface is assumed to be a plane-parallel to the ground

surface and the end effects can be neglected. With small ratios of D/L this type of analysis is often appropriate. The forces acting on a slice of an infinite slope is shown in Fig. 7. There is no internal distortion and end effects are neglected. From the consideration of force equilibrium, the safety factor (F) is obtained explicitly as (Morgenstern and Sangrey, 1978)

$$F=(c'/\gamma d)\sec\alpha \operatorname{cosec}\alpha + (\tan\phi'/\tan\alpha)[1-(\gamma_w h/\gamma d)\sec^2\alpha] \quad (6)$$

The ultimate angle of stability, β_u, is obtained by setting effective cohesion intercept (c') equal to zero keeping other parametric values the same in Fig. 3. The zero value for the effective cohesion intercept reflects the long-term effects of weathering, unloading, and previous mass failures on the cohesive component of the shear strength on the face of a natural slope (Skempton, 1964). The straight line indicates that slope stability for $c'=0$ depends only on the ground-water pressure and the value of ϕ' and is independent of the slope height. For $H_w=0$ and $H_w=H$ the values of β_u can be computed from Eqn. 6. The values of β_u for the intermediate values of H_w are obtained from shallow rotational slips. Influence of ground-water level on β_u, i.e. the shallow slide stability, is shown in Fig. 8. The values of β_u for different ϕ' and H_w are given in Table 6. These values can be used in regrading a slope to a uniform stable angle. A segment of a bluff at Madigan Beach, Ashland County, Wisconsin was indeed regraded to a stable inclination of 22° to 25° based on these values in a demonstration project (Edil et al. 1979).

Sterrett (1980) reported slab slides with a depth of about 0.6m from Milwaukee County, Wisconsin. This depth coincided closely with the depth of desiccation cracking and soil structure change from fine prismatic peds to massive intact blocks. The latter was attributed to repeated freeze-thaw cycles. Sterrett also observed that frozen slabs of soil measured 0.6 m by 10 m by 13 m failed in early spring. This failure was attributed to differential melting

of the bluff face. Certain parts of the bluffs melt faster because of difference in orientation. The upper part of the bluff face generally melts before the middle and lower parts. Sterrett believed that melt water seeped into the ground and exerted hydrostatic pressure behind the frozen slabs of the lower parts.

SOLIFLUCTION, FLOW, AND CREEP

Distributed movements within debris are recognized as flows. Slip surfaces within the moving mass are usually not visible and the boundary between moving mass and material in place may be a sharp surface of differential movement. Flows commonly result from unusually heavy precipitation or from thaw of snow or frozen soil. The flows observed in the Great Lakes bluffs take place mostly in spring and result from primarily ground thawing and snow/ice melting. Therefore, they can be classified largely as solifluction. Solifluction (literally means soil flow) occurs in areas of perennially or permanently frozen ground and takes many forms involving a variety of mechanisms. Soliflucion is the downslope movement of water saturated materials which follows thawing in previously frozen slopes. Seasonally frozen subsurface layers of soil prevent percolation of water from upper thawed layer (termed "active layer"). The active layer becomes saturated with water from melting of ice lenses within it as well as from melting snow and rainfall. The effect of excess water is to fluidize the active layer reducing its strength and cause it to move downslope by gravity.

The extent of solifluction depends on the grain size of the slope material, availability of water, depth of frost penetration, number and duration of freeze-thaw cycles, inclination of the ground surface, and competence of the vegetative cover (Embleton and King, 1975). Vegetation appears to be the most restraining factor for solifluction. The size of the flows along the Western Lake Michigan shoreline varies from 0.3 to 0.6 m wide to 15 to 20 m wide

and 21 m long.

A number of approaches for the analysis of solifluction failures have been suggested. Chandler (1970) used effective stress analysis and the mechanism called "ice-blocked drainage". McRoberts and Morgenstern (1974) also used the effective stress method along with the theory of thaw-consolidation. In both approaches, the residual strength parameters were used. Hutchinson (1974), on the other hand, developed a method of using the total stress method along with the undrained strength of the soil. All three approaches were based on infinite slope analysis. In other words, it was assumed that the moving mass at least started as a rigid and continuous mass sliding on a surface parallel to the ground surface. The least slope angle at which the mudflows are mobilized in the field is usually smaller compared to the least slope angle obtained from the stability analyses based on the infinite slope approach for residual strength conditions. Vallejo (1979, 1980a, 1980b, 1981) introduced a new approach to the analysis of solifluction that reflects the particulate structure of the flowing mass. The structure of the frozen soils forming natural slopes in cold regions consists of a reticulate ice vein network subdividing the frozen soil into irregular blocks (McRoberts and Morgenstern, 1974). Upon thawing, the structure will then consist of a mixture of hard pieces of soil and water. This water can change to a liquid-like soil slurry after the failure. Vallejo analyzed the stability of this system of large soil pieces and water, as shown in Fig. 9, using the finding of Bagnold (1954) regarding the movement of concentrated grains in dispersion (grain flow). The safety factor with respect to flow is given as

$$F = \frac{[c'_r + (\gamma_s - \gamma_f)\ d \cos\beta \tan\phi'_r\ ]\ C}{[\gamma_f + (\gamma_s - \gamma_f)\ C]\ d \sin\beta} \qquad (7)$$

where the terms are as defined in Fig. 9. Vallejo and Edil (1981) applied this analysis to a coastal bluff in Kewaunee, Wisconsin with successful field verification. The critical

depth of thaw (normal to the slope face) at which failure occured was measured to be 0.25 m.

Flows other than solifluction and creep (deformation under constant stress) are also evident on the Great Lakes bluffs. However, these processes appear relatively minor in comparison to the predominant solifluction in spring and the associated mass wasting.

RAIN IMPACT AND RILL/SHEET EROSION

Raindrop impact is the dominant factor in the detachment of soil particles. Sheetwash is the unconfined flow of water over the ground surface after a rainfall. Depths of flow are generally only a few millimeters. The majority of rainfall detachment studies relate total soil loss from a storm to the total energy of the storm. At the present, there is no unified theory which will relate soil loss to raindrop impact. Nevertheless, grain size, soil structure, and permeability are the important soil properties controlling detachability.

Once the particles are detached they transport downslope. The transport capacity of interrill flow is primarily a function of runoff rate, slope steepness, roughness of the surface, transportability of the detached soil particles, and the effect of raindrop impact (Foster and Meyer, 1975).

Rills are the concentrated (channelized) flow of water on a hillslope. Rill erosion takes place in terms of detachment by flow and transportation by flow. Rill formation tends to follow the zones of weaknesses on the slope face. Rill flow, unlike sheet flow, can attain high enough shear stresses to detach and transport soil particles.

There are only a few reports of sheet/rill erosion on the Great Lakes bluffs even though it is commonly observed along the bluffs. Sterrett (1980) investigated this process along with slumping and solifluction on a systematic basis at several sites along Lake Michigan and Lake Superior

shorelines. Based on field observations, Sterrett concluded that most of the material removed from the slopes during summer is via sheetwash and rill erosion. However, it was not possible to relate soil loss simply to precipitation. He found the Universal Soil Loss Equation useful in predicting soil loss from steep slopes when modified as suggested by Foster and Wischmeier (1974). The modified equation gives average soil loss per unit area per unit time, A as

$$A = RKCP \frac{\sum_{j=1}^{n} S_j \lambda_j^{1+m} - S_j \lambda_{j-1}^{1+m}}{\lambda_e (72.6)^m} \qquad (8)$$

where R=rainfall factor, K=soil erodibility factor, C=cropping management factor, P=erosion-control practice factor, S_j=slope factor of the jth segment, λ_j=slope length of the jth segment, λ_e=entire slope length, m=coefficient of variation (about 0.3).

SAPPING

Sapping is the removal of soil particles by seeping water. This proces is most effective with cohesionless materials such as silts and sands. Coastal bluffs are often ground-water discharge areas and seep points and seepage faces are commonly encountered on the bluffs. Erosion of cohesionless deposits at the bluff face may lead to the collapse of overlying cohesive soils when support is removed.

In many areas along the Lake Michigan bluffs in southeastern Wisconsin relatively impermeable clayey tills or lake sediments are overlain by more permeable sand or sandy silt. Following periods of abundant rainfall, perched water tables may form in these more permeable beds. Lines of springs will develop where these beds are exposed along the bluffs. In saturated sand and silt associated with the

springs along the bluffs numerous small failures occur (Hadley, 1974). There is no known report regarding the relative contribution of this process to the overall mass wasting in the Great Lakes bluffs.

WIND EROSION

Wind, in addition to generating waves, may also directly attack the beach and produce some beach erosion. Beach sediment is carried landward and accumulates in the form of dunes. This type of beach erosion takes place when there is a well-developed beach and results in a net gain of sediment to the coastal zone (Davis et al., 1973). Wind transport of sand-and-silt-sized material picked from dunes themselves is increased by the removal of vegetation that both slows the wind speed and binds the soil. Wind erosion becomes dominant in dry areas and on bluffs consisting of cohesionless materials. Dunes are dominant along the south and eastern shoreline of Lake Michigan in the Great Lakes and wind erosion may reach significant levels there. Along bluffs formed in cohesive soils it does not appear to be very significant in comparison to other processes. There are not many reports of significant wind erosion of the Great Lakes bluffs. Marsh et al. (1973) report wind erosion of 4 in. sand per winter from a 270 ft high bluff near Grand Marais.

ICE EROSION

During a normal winter season, substantial ice develops along the shores of the Great Lakes. The long, narrow, continuous ridges of grounded ice, separated by broad areas of low-relief ice that parallel much of the shoreline is called an icefoot (Marsh et al., 1973). The icefoot is of geomorphic importance, as it protects the shoreline from the high-energy waves of winter and spring, thereby reducing rates of erosion which otherwise might be expected. Another

geomorphic influence of lake ice ridges is the scouring of the lake bottom, especially along sandy shorelines. During the final phases of icefoot decay, masses of free ice, driven by strong winds and storm waves can also cause extensive damage to shore protection structures along the lake shore.

With the opening of the Great Lakes to winter navigation other effects such as the liquefaction and flow of nearshore sand on slopes by wave action of water confined under the ice may be expected at some places (Wuebben et al., 1978).

DISCUSSION

In the previous section the processes of downslope movement and the factors that control them were discussed. In this section an attempt will be made to delineate the relative importance of each process in bluff retreat and approaches of past and future research on coastal bluff processes on Great Lakes shorelines will be discussed.

Objectives of Research

Most research that has been done or will be done has practical objectives. Although a number of theoretical concepts have developed in this work, the end product and therefore research design, has been aimed at solving specific problems. Two main types of research design are typical (Wisconsin Coastal Management Program, 1979).

The first category, site-specific studies, have been undertaken at numerous locations. These are often associated with structural solutions to shore recession problems. In these studies an attempt is usually made to identify and understand slope-stability problems at a single site over a relatively short period of time. I will later consider this aspect in more detail because it is apparent from the literature and from personal observation that there are definite problems and misconceptions in this area.

The second approach to shore erosion problems is

generally associated with non-structural solutions over a longer stretch of shoreline. In order to develop zoning regulations for building setbacks, relocation policy, etc. units of shoreline the size of a state or at least a county are usually considered. These studies are usually aimed at minimizing future losses. In this case the need for understanding bluff processes is more acute because predictions of future recession over a long period of time with changing water-level and climatic conditions is necessary.

This type of study requires an initial survey of the shoreline to establish rate of recession (usually with aerial photographs) and identify problem areas. This should be followed by a field survey where geologic units, position of ground water seeps, type of failure, bluff height and bluff angles are established. This was done in Wisconsin (Mickelson et al. 1976) as part of a project supported by the Coastal Zone Management Program. One conclusion of this project was the realization that predictions of future recession could not be made without an understanding of the time scales involved in bluff degradation and slope adjustment to external change. Another conclusion was that there was a need to understand the relative importance of the different processes in removing material from the bluff and the relative importance of factors leading to downslope movement. Finally, the need for models of bluff evolution was recognized. Progress in each of these need areas is discussed in the following sections.

Time Scale

Different parts of geomorphic systems respond at different rates to changes in external parameters. In addition, some bluffs appear to pass through an evolutionary sequence which is only interrupted when external variables surpass a threshold level. In other words, it appears that once toe erosion initiates an unstable slope, a predictable progression of failures take place on the bluff irrespective

of water level or the amount of wave erosion (Edil and Vallejo, 1977; Peters, 1982). The problem with prediction is understanding response times to environmental changes and to understand the time necessary for bluffs to pass through an evolutionary sequence.

Evidence from other areas with evolving slopes such as river banks and marine coasts (McGreal, 1979; Cambers, 1976; Hutchinson, 1973) as well as from the Great Lakes (Peters, 1982) suggest that there are possibly three time scales over which the natural cycles of evolution take place. These scales are 2-3 years, 50 to 100 years, and thousands of years.

It is unfortunate that more information in this area is not available. Without a clearer understanding of the time scales of change on coastal bluffs predictions of future change are likely to be misleading or, in fact, incorrect.

In Wisconsin, we are attempting to understand time scales by looking at segments of shoreline with uniform characteristics through time. In some cases these shore segments may be as short as 100 m or as long as 10 km. If internal characteristics can be made uniform, we should be able to examine the effect of changing environmental factors on bluff evolution.

Relative Importance of Environmental Factors

As discussed in a previous section, water level (because of its control on toe erosion) is a primary long-term cause of bluff instability. Given a low water level for long periods of time (100 years) most slopes along the shoreline would become nearly stable.

A study by Brandon and Rideout (1980) indicated that the majority (more than 90%) of the property owners in three regions along the eastern Lake Michigan shoreline perceived wave action (and lake level) as the cause of erosion damage. Ground-water seepage, ice erosion, and spring than received 30 to 50% of the respondents secondary causes. These answers are obviously biased by the conditions in that region. The

eastern shore of Lake Michigan has extensive shoreline consisting of cohesionless dunes which immediately respond to changes of water level and wave energy.

In the technical literature practically every report on the subject cites wave action as a controlling factor on bluff erosion and there are quite a number of studies that attempt to document it (Quigley and Gelinas, 1976; Quigley et al., 1977; Quigley and Tutt, 1968; Gelinas and Quigley, 1973; Davis et al., 1973; Brater and Ponce-Campos, 1978; Brater et al., 1974; Edil et al., 1979; Zeman, 1978).

It should be pointed out, however, that along bluffs of cohesive materials wave erosion is often only the "trigger" that initiates slope failure. Decrease in water level or toe protection may control wave erosion but mass wasting on the bluff normally continues to be a problem for a long period of time. Relatively large rotational slides have been observed to take place in areas free of significant wave erosion, for instance during times of low lake levels (Quigley et al., 1977). A large slide occured in an area south of Bender Park, Milwaukee County, Wisconsin in 1979. The toe has been protected from wave erosion for at least 20 years by the beach that built up north of the power plant.

There are a significant number of reports that refer to the role of ground water in coastal bluff slumping (Sterrett and Edil, 1982; De Young and Brown, 1979; Lee, 1975; Palmer, 1973; Berg and Collinson, 1976; Bird and Armstrong, 1970; Marsh, et al., 1973; Pincus, 1964). In some of these studies ground water was singled out as the most critical factor, acting quite independently from contributing factors. Ground water is certainly an important factor in determining stable-slope angles and can cause long term stability problems. Sterrett (1980) monitored a series of wells near the bluff edge south of Milwaukee. In this fractured till water level rose quickly after a precipitation event. Photographs and profile measurements seem to demonstrate that movement on slump blocks is directly tied to this rise in water level. Similar observations were made in Racine County Coast Watch Program (1981). Slump activity was observed to

be related to substantial precipitation events; storm wave events alone did not seem to have a direct effect on bluff recession rather an indirect one.

Mickelson (personal communication, 1982) reports several localities where slopes are near vertical and stable where ground water is not present. In identical materials only 100 m away, where ground-water is present, slopes are at angles of less than 30° and are actively moving.

Drexhage and Calkin (1981) studied historic bluff recession along the Lake Ontario shoreline of New York as a function of nine parameters. They found a strong relationship between erosion rate and bluff height when the bluff is higher than 6 m. The rate also correlated with bluff composition (greater for clayey/silty till than sand and sandy till) and with bluff slope (higher for inclinations greater than 45°). It appears that bluff slumping is a prominent mode of slope retreat in this region.

Vegetation and its role on slope processes and stabilization is another topic that should be mentioned here. Much of the information pertinent to this subject is contained in the Proceeding of the Great Lakes Vegetation Workshop and in the excellent summary provided by Gray (1977) in the same volume. It is known that vegetation is particularly effective in controlling particle movement, e.i. the sheet/rill erosion and solifluction. Fowle et al (1978) reported from their study of Scarborough bluffs on Lake Ontario that vegetation can become established on the bluffs and progress to forested slope. However, this can only happen in well-drained areas protected from toe erosion and where ground-water seepage is controlled. Recession will continue until these erosive forces and deep slumps are reduced or eliminated. When this has been done, plants may well serve an important role in erosion control and check the recession which now continues apace.

Relative Importance of Slope Processes

There are a few attempts to study a number of factors or

processes irrespective of the causes on a comparative basis Sterrett (1980) provided a comprehensive and quantitative view of the bluff processes resulting in slope retreat at selected sites along the western Lake Michigan shoreline where high bluffs in glacial till and related materials are abundant. The total soil loss per year for two of the sites monitored for three years and the relative importance of each process are given in Table 7. Face degradational processes cause a considerable amount of mass-wasting on a nearly continuous basis on active slopes lacking vegetation.

A number of investigators have studied slumping because it is a major and well-defined event (Edil and Vallejo, 1977; Quigley and Di Nardo, 1978; Berg and Collinson, 1976). Slumping, unlike face degradational processes, is a discreet event and involves large volumes of material. McGreal (1979) designates slumping as the most significant mass wasting process in coastal cliff recession in Ireland.

Potential of Developing Slope Evolution Models

From the review of the literature it is apparent that bluffs or dunes composed of granular materials respond to wave action and other erosive processes directly and tend to have parallel retreat of the bluff face without deep slips and time delays. Therefore, modelling their behavior qualitatively and even quantitatively is an achievable task (Peters, 1982) unlike the clay bluffs where possible deep slips, delayed response and other factors make modelling rather difficult. Hutchinson (1973) described a cyclic response model of coastal slopes in England to toe erosion. Quigley et al. (1977) and Edil and Vallejo (1977) described qualitative models for bluffs studied on Lake Erie and Lake Michigan, respectively. Peters (1982) building on research and data base of Vallejo (1977) and Sterrett (1980) proposed evolutionary models for bluffs at five carefully selected sites along western Lake Michigan shoreline and provided predictions for their future for different lake levels. Quantitative models, or even generalizations of existing

qualitative models of coastal bluff recession are not available at this time.

CONCLUSIONS

Based on the review of the literature available to the author and his own experiences the following conclusions are advanced:

A. Structural (Stabilization) Approach

1. The tools for the analysis, design and construction of structural solutions on a site-specific basis are currently available. The problems associated with the execution of this category of solutions seem to be of two types: (a) many attempts are not engineered and fail to cope with the problems and (b) those engineered solutions quite often neglect to consider all aspects of the problem.

2. A stabilization program should include the follwing steps:
   a) Protection against wave action: this may include shore protection structures such as groins, seawall, breakwaters, etc. and/or beach building (nourishment) or a natural drop in lake levels.
   b) Stabilization against deep slips: a bluff may have a stable or unstable profile at the time of stabilization. This should be verified by a geotechnical analysis. If not safe against a deep slip in the long-term bluff should be stabilized. Methods include regrading to a stable angle, toe-loading with a berm, lowering of ground water and attendant pore pressures, controlling and intercepting surface and ground water. If the bluff is safe against a deep slip proceed to step (c).

c) Stabilization against face degradation: this may be achieved by flattening the slope to the ultimate angle of stability plus vegetation or allowing a steeper angle than this but less than the angle to initiate a deep slip plus occasional maintenance after shallow slips. Vegetation is also needed.

3. Additional research is needed primarily in the technology and development of economic ways of stabilization in all aspects of slope failure.

B. Nonstructural Approach (Planning and Management)

Our technical understanding of coastal recession over a long period of time, say 30 to 50 years, appears quite limited for quantitative predictions. Tools for such an analysis even on a site-specific basis, are not well-established. However, this does not mean that there has not been any progress. Research conducted primarily during the last decade or two has identified the operating processes and their possible magnitudes. We have at least a qualitative appreciation of the factors and the processes and some conceptual models of the interrelationship of these.

FURTHER RESEARCH NEEDS

Models of long-term erosion/recession processes need to be established. This will require introduction of probabilistic modelling and long-term monitoring at least at selected sites. Schultz (1980) applied the probabilistic assessment of slumping potential to southwestern shoreline of Lake Superior on a reach by reach basis. This sort of approach should be expanded to include the potential for the other significant mass wasting processes.

Systematic monitoring is the single most important recommendation for further research. Monitoring of sites for a few years will not provide the data basis needed for the

formulation of long-term trends. Such a program should obtain quantitative data on the causative factors discussed and the response of the shoreline in terms of geomorphic changes.

ACKNOWLEDGEMENTS

The author wishes to acknowledge the contributions of his colleague Dr. David M. Mickelson, to his understanding of the coastal bluff slumping problem over the years. He also reviewed this manuscript. Many former students at the University of Wisconsin-Madison contributed to the shore erosion research. Among them Drs. L. E. Vallejo and R.J. Sterrett and Messrs. B.J. Haas, M.E. Schultz, A. Bagchi, R. De Groot, and C. Peters are acknowledged. The financial support provided by the National Oceanic and Atmospheric Administration, U.S., Department of Commerce through the Wisconsin Sea Grant Program and the Wisconsin Coastal Zone Management Program over the years supported the research. Finally, the author wishes to acknowledge the sponsorship of this paper by the Michigan Sea Grant Program as part of a project supported by the U.S. Geological Survey. Miss Nermin Demircioglu's effort and patience in rapid typing and processing of the manuscript is appreciated.

REFERENCES

Bagnold, R.A. (1954), "Experiments on a Gravity-Free Dispersion of Large Solid Spheres in a Newtonian Fluid Under Shear," Proc. Royal Soc., Series A 225, pp. 49-63.

Berg, R.C. and Collinson, C. (1976), "Bluff Erosion, Recession Rates, and Volumetric Losses on the Lake Michigan Shore in Illinois," Illinois State Geological Survey, Environmental Geology Notes, No. 76.

Bird, S.J.G. and Armstrong, J.L. (1970), "Scarborough Bluffs-A Recessional Study," Proc. 13th Conf. Great Lakes Res., pp. 187-197.

Bishop, A.W. (1955), "The Use of the Slip Circle in the Stability Analysis of Slopes," Geotechnique, Vol. 5, No. 1, pp. 7-17.

Braden, P.L. and Rideout, S.R. (1980), "Consumer Investment in Shore Protection," Michigan Sea Grant Program, MICHU-SG-80-200.

Brater, E.F. (1975), "Beach Erosion in Michigan: An Historical Review," University of Michigan.

Brater, E.F., Armstrong, J.M. and McGill, M. (1979), "Michigan's Demonstration Erosion Control Program, Evaluation Report," Michigan Department of Natural Resources.

Brater E.F. and Ponce-Campos, C.D. (1978), "Coastal Engineering and Erosion Protection: Report for the Year 1976-77," Michigan Sea Grant Program, MICHU-SG-78-201.

Bretschneider, C.L. (1958), "Revisions in Wave Forecasting: Deep and Shallow Water," Proc. 6th Conf. Coastal Engineering, Engineering Foundation.

Cambers, C. (1976), "Temporal Scales in Coastal Erosion Systems," Trans. Inst. British Geogr. New Ser. Vol. 1, No. 2, pp. 246-256.

Carson, M.A. and Kirkby, M.J. (1972), Hillslope Form and Process, Cambridge university Press, London.

Carter, C.H. (1976), "Lake Erie Shore Erosion, Lake County, Ohio: Setting, Processes, and Recession Rates from 1876 to 1973," Ohio Geol. Survey Rept. Investigations No. 99.

Chandler, R.J. (1970), "Solifluction on Low-Angled Slopes in Northamptonshire," Q.J. of Eng. Geol., Vol. 3, pp. 65-69.

Davis, Jr., R.A. Seibel, E. and Fox, W.T. (1973), "Coastal Erosion in Eastern Lake Michigan-Causes and Effects," Proc. 16th Conf. Great Lakes Res., pp. 404-412.

DeYoung, B. and Brown, L. (1979), "Controlling Bluff Groundwater Along the Great Lakes," New York Sea Grant Program, Page 102.00.

Drexhage, T. and Calkin P.E. (1981), "Historic Bluff Recession Along the Lake Ontario Coast, New York," New York Sea Grant Institute Albany, New York.

Dobson,R.S. (1967), "Some Applications of a Digital Computer to Hydraulic Engineering Problems," Stanford Univ., Dept. Civil Eng., Tech, Rep., No. 80, 172 p.

Edil, T.B. and Haas, B.J. (1980), "Proposed Criteria for Interpreting Stability of Lakeshore Bluffs," Engineering Geology, No. 16, pp. 97-110.

Edil, T.B., Monkmeyer, P.L., Becker, N.M., Shands, J.A and Wolf, P.R. (1979), "Evaluation of Shore Protection Demonstrations at Madigan Beach and Madeline Island, Wisconsin," In: The Red Clay Project Final Report. Environmental Protection Agency.

Edil, T.B. and Vallejo, L.E. (1977), "Shoreline Erosion and Landslides in the Great Lakes," Proc. 9th Int. Conf. Soil Mech. and Foundation Eng., Tokyo, Vol. 2, pp. 51-57.

Edil, T.B., and Vallejo L.E. (1979), "Mechanics of Coastal Landslides and the Influence of Slope Parameters," Engineering Geology, No. 126 pp. 83-96.

Embleton, C. and King, C.A.M. (1975), Glacial and Periglacial Geomorphology, Edward Arnold, London.

Environment Canada (1975), Canada-Ontario Great Lakes Shore Damage Survey Technical Report.

Fisher J.S., Gulbrandsen L.F., and Goldsmith V. (1975), "Analytical Prediction of Shoreline Erosion," Proc. Ocean Engineering III ASCE Specialty Conference Newark, Delaware.

Foster, G.R. and Meyer, L.D. (1975), "Mathematical Simulation of Upland Erosion by Fundamental Erosion Mechanics," In: Present and Prospective Technology for Predicting Sediment Yields and Sources, U.S. Department of Agriculture, Agricultural Research Service, ARS-S-40, pp.-190-206.

Foster, G.R. and Wischmeier, W.H. (1974), "Evaluating Irregular Slopes for Soil Loss Prediction," Transactions, American Society of Agricultural Engineers, Vol. 17, pp. 305-309.

Fowle, C.D., Collishaw, G. and Lewis, M.F. (1978), "Vegetation and Erosion on Scarborough Bluffs, Lake Ontario," Proc. 2nd Workshop on Great Lakes Coastal Erosion and Sedimentation, Burlington, Ontario, pp. 33-36.

Gelci, R., Cazale, H. and Vassal, J. (1957), "The Spectroangular Method: Forecasting Ocean Waves," Min. Trav. Publics Transports, Meteorol. Natl. (Paris), Notice Inform. Tech., Vol. 22, no. 3.

Gelinas, P.j. and Quigley, R.W. (1973), " The Influence of Geology on Erosion Rates Along the North Shore of Lake Erie," Proc. 16th Conf. Great Lakes Res., pp. 421-430.

Gray, D.H. (1977) "The Influence of Vegetation on Slope Processes in the Great Lakes Region," Proc. Workshop on the Role of Vegetation in Stabilization of the Great Lakes Shoreline, Great Lakes Basin Commission, Ann Arbor, Michigan.

Great Lakes Basin Commission (1981), Coastal Hazards Plan and Environmental Impact Statement, Ann Arbor,Michigan.

Great Lakes Basin Framework Study (1975), Appendix 12.

Hadley, D.W. (1976), "Shoreline Erosion in Southeastern Wisconsin," Geol. and Natural History Survey Report, University of Wisconsin-Extension, Madison, Wisconsin.

Hutchinson, J.N. (1973), "The Response of London Clays to Differing Rates of Toe Erosion," Proc. Geologica Applicata E Idrogeologica, Vol. 8, Part. 1, Naples, Italy.

Hutchinson, J.N. (1974), "Periglacial Solifluction: an Approximate Mechanism for Clayey Soils. Geotechnique, Vol. 24, pp. 438-443.

International Joint Commission, (1973), Regulation of Great Lakes Water Levels, Appendix C: Shore Property.

Johnson, C.N. and Hiipakka, L.W. (1976), "Sand-Bypass and Shore Erosion, Bridgeman, Michigan," Proc. 15th Coastal Engineering Conference, Honolulu, Hawaii, pp. 856-858.

Keillor, J.P. (1978), "Recent Recession Of Lake Michigan Shorelines in Racine County," Wisconsin Sea Grant Program Advisory Services, Special Report No. 507.

Lee, K.K. (1975), "Bluff Recession in Lake Michigan Shoreline Erosion," J. Soil and Water Conservation, pp. 138-139.

Marsh, W.M., Marsh, BD. and Dozier, J. (1973), "Formation, Structure, and Geomorphic Influence of Lake Superior Icefoots," American J. Science, Vol. 273, pp. 48-64.

McRoberts, E.C. and Morgenstern, N.R. (1974), "The Stability of Thawing Slopes," Can. Geotech. J., Vol. 11, No. 4, pp. 447-469.

McGreal, W.S. (1979) "Cliffline Recession Near Kilkeel N. Ireland: An Example of a Dynamic Coastal System," Geogr. Ann. Vol. 61A, No. 3-4, pp. 211-219.

Mickelson, D.M. (1982), Personal communication.

Mickelson, D.M., Acomb, L.J. and Edil, T.B. (1979), "The Origin of Preconsolidated and Normally Consolidated Tills in Eastern Wisconsin, U.S.A.," In: Moraines and Varves, Balkema, Rotterdam, pp. 54-63.

Morgenstern N.R. and Sangrey D.A. (1978), "Methods of Stability Analysis," In: Landslides, Ed. R.L. Schuster and R.J. Krizek, Special Report 176, Transportation Research Board, Washington, D.C. pp. 155-171.

Palmer, H.D. (1973), "Shoreline Erosion in Upper Chesapeake Bay: the Role of Grounwater," Shore and Beach, pp. 19-22.

Peters, C. (1982), "Models of Short and Long-Term Geomorphic Evolution of Bluffs in the Great Lakes," M.S. Thesis, Dept. Geology and Geophysics, Univ. of wisconsin, Madison.

Philips, B.A.M. (1978), "Coastal Erosion, North and East Shores of Lake Superior," Proc. 2nd Workshop on Great Lakes Coastal Erosion and Sedimentation, Burlington, Ontario, pp.37-40.

Pierson, Jr., W.J., Neumann, G. and James, R.W. (1955), "Practical Methods for Observing and Forecasting Ocean Waves by means of Wave Spectra and Statistics," U.S. Naval Hydrograph, Office Publ., 603.

Pincus, H.J. (1964), "Retreat of Lakeshore Bluffs," J. Waterways and Harbors Division, ASCE, Vol. 90, No. WW1, pp. 115-134.

Quigley, R.M. and Di Nardo, L.R. (1978), "Cyclic Instability Modes of Eroding Clay Bluffs Lake Erie Northshore Bluffs at Port Bruce, Ontario, Canada," Proc. AAG-IGU Coastal Symp. New Orleans, Louisiana.

Quigley, R.M. and Gelinas, P.J. (1976), "Soil Mechanics Aspects of Shoreline Erosion," Geoscience, Canada, Vol. 3, No. 3, pp. 169-173.

Quigley, R.M., Gelinas, P.J., Bou, W.T. and Parker, R.W. (1977), "Cyclic Erosion-Instability Relationship, Lake Erie North Shore Bluffs," Can. Geotech. J., Vol. 14, pp.310-323.

Quigley, R.M. and Tutt, D.B. (1968), "Stability-Lake Erie North Shore Bluffs," Proc. 11th Conf. Great Lakes Res., pp. 230-238.

Racine County Coast Watch Program (1981), Final Report, Racine County Planning and Zoning Department, Wisconsin.

Resio, D.T. and Vincent, C.L. (1976), "Estimation of Winds Over the Great Lakes," Misc. Paper H-76-12, U.S. Army Engineers Waterways Experiment Station, Vicksburg, Missisippi.

Schultz, M.N. (1980), "Probabilistic Stability Analysis of Slopes Along the Southwestern Lake Superior Shoreline," M.S. Independent Study Report, Dept. Civil and Environmental Engineering, Univ. of Wisconsin, Madison, Wisconsin.

Seibel, E. (1972), "Shore Erosion at Selected Sites Along Lakes Michigan and Huron," Ph.D. Thesis, Dept. Geology, Univ. of Michigan, Ann Arbor, Michigan.

Sevaldson, R.A. (1956), "The Slide in Lodalen, Oct. 6. 1954," Geotechnique, Vol. 6, pp. 167-182.

Sharpe, S.F.S. (1938), Landslides and Related Phenomena, Colombia Univ. Press, New York.

Skempton, A.W. (1953), Discussion in "Soil Stability Problems in Road Engineering," Proc. Inst. Civ. Eng. Vol. 2, No. 2, pp. 265-268.

Skempton, A.W. (1964), "Long-Term Stability of Clay Slopes," Geotechnique, No. 14, pp. 77-101.

Skempton, A.W. and DeLory, F.A. (1957), "Stability of Natural Slopes in London Clay," Proc. 4th Int. Conf. Soil Mech. and Foundation Eng., London, Vol. 2, Pp. 378-81.

Skempton, A.W. and Hutchinson, J.N. (1969), "Stability of Natural Slopes and Embankment Foundations," State-of-the-Art Report, Proc. 7th Int. Conf. Soil Mech. and Foundation Eng., Mexico, pp. 291-334.

Sterrett R.J. (1980), "Factors and Mechanics of Bluff Erosion on Wisconsin's Great Lakes Shorelines," Ph.D. Thesis, Dept. Geology and Geophysics, Univ. of Wisconsin, Madison, Wisconsin.

Sterrett, R.J. and Edil, T.B. (1982), "Ground-Water Flow Systems and Stability of a Slope," Ground Water, Vol. 20, No. 1, pp. 5-11.

Sverdrup, H.U. and Munk, W.H. (1947), "Wind, Sea, and Swell: Theory of Relations for Forecasting," U.S. Naval Hydrograph, Office Publ. 601.

Tovell, W.M. (1977), "Not Ours to Control," Rotunda, Vol. 10, No. 3.

U.S. Army, Corps of Engineers (1971), Great Lakes Region Inventory Report National Shoreline Study.

Vallejo L.E. (1977), "Mechanics of the Stability and Development of the Great Lakes Coastal Bluffs," Ph.D. Thesis, Dept. Civil and Environmental Eng. Univ of Wisconsin, Madison, Wisconsin.

Vallejo, L.E. (1979), " An Explanation for Mudflows," Geotechnique, Vol. 29, No. 3, pp. 351-354.

Vallejo, L.E. (1980a), "Mechanics of Mudflow Mobilization on Low Angled Clay Slopes," Engineering Geology, No. 16, pp. 63-70.

Vallejo, L.E. (1980b), "A New Approach to the Stability Analysis of Thawing Slopes," Can. Geotech. J., Vol. 17, pp. 607-612.

Vallejo, L.E. (1981), "Stability Analysis of Mud Flows on Natural Slopes," Proc. 10th Int. Conf. Soil Mech. and Foundation Eng., Vol. 3, Stockholm, pp. 541-544.

Vallejo, L.E. and Edil T.B. (1979), "Design Charts for Development and Stability of Evolving Slopes," J. Civil Eng. Design, Vol. 1, No. 3, pp. 231-252.

Vallejo, L.E. and Edil T.B. (1981), "Stability of Thawing Slopes: Field and Theoretical Investigations," Proc. 10th Int. Conf. Soil Mech. and Foundation Eng., Vol. 3, Stockholm, pp. 545-548.

Varnes, D.J. (1958), "Landslide Types and Processes," In: Landslides and Engineering Practice, Ed. E.B. Eckel, H.R.B. Special Report 29, Washington D.C. pp. 20-47.

Varnes, D.J. (1978), "Slope Movement Types and Processes," In: Landslides, Ed. R.L. Schuster and R.J. Krizek, Special Report 176, Transportation Research Board, Washington D.C.

Wisconsin Coastal Management Program (1979), Wisconsin's Shore Erosion Plan: an Appraisal of Options and Strategies by R. Springman and S.M. Born, Madison, Wisconsin.

Wuebben, J.L., Alger, G.R. and Hodek, R.J. (1978), "Ice and Navigation Related Sedimentation," Proc. IAHR, Symp. on Ice Problems, Lulea, Sweden, pp. 393-403.

Zeman, A.J., (1978), "Natural and Man-made Erosion Problems Along the Port Burwell to Long Point Shoreline," Proc. 2nd Workshop on Great Lakes Coastal Erosion and Sedimentation, Burlington, Ontario, pp. 49-52.

TABLE 1

THE GREAT LAKES SHORELINE, DESCRIPTION OWNERSHIP AND USE, 1970

Great Lakes Shoreline		United States (a) Total Miles	Canada (b) Total Miles
1. PHYSICAL CHARACTERISTICS			
With a beach zone		2,107	5,306
Without a beach zone		1,572	981
	Total	3,679	6,287
2. USE			
Residential		1,216	1,261
Commercial and Industrial		189	329
Agricultural and Undeveloped		633	695
Forest		1,159	3,396
Recreation		365	357
Public Building and Related Lands		60	99
Fish and Wildlife Wetlands		57	148
	Total	3,679	6,286
3. OWNERSHIP			
Federal		133	374
Non-Federal Public		517	2,378
Private		3,029	3,535
	Total	3,679	6,287
4. PROBLEM-IDENTIFICATION			
Non-Eroding		1,704	839
Significant Erosion			
Critical		214	320
Non-Critical		1,046	4,907
Subject to Flooding		335	72
Protected		380	149
	Total	3,679	6,288
5. TOTAL SHORELINE MILEAGE		3,679	6,288

(a) Source: Department of the Army, Corps of Engineers, North Central Division, Great Lakes Regional Inventory Report National Shoreline Study, August 1971, does not include islands and connecting rivers.

(b) Source: 1966 Field Surveys, Department of Public Works, Canada, includes Canadian national reach to Trois Rivieres.

1 mile = 1.61 km

Table 2. SHORETYPES (USA)

ERODIBLE BLUFFS	1188 MILES	32%
ERODIBLE LOW PLAINES	623 "	17%
SAND DUNES	325 "	9%
NONERODIBLE	904 "	24%
OTHER (FILLS, WETLANDS, ETC.)	675 "	18%
TOTAL	3715 MILES	100%

Table 3.- FORCES, RESISTANCES AND SLOPE PROCESSES

FORCES	GRAVITY	MASS MOVEMENT SLIDING ROTATIONAL: SLUMPS TRANSLATIONAL: BLOCK SLIDE, SLAB SLIDE FLOW SOLIFLUCTION DEBRIS FLOW CREEP	PROCESSES
	VIBRATIONS		
	CLIMATE		
RESISTANCES	SHEAR STRENGTH	PARTICLE MOVEMENT WAVE EROSION WIND EROSION ICE EROSION RILL/SHEET EROSION SAPPING	
	VEGETATION		
	STRUCTURAL SYSTEMS		

Table 4. Abbreviated Classification of Slope Movements (from Varnes, 1978)

TYPE OF MOVEMENT			TYPE OF MATERIAL		
			BEDROCK	ENGINEERING SOILS	
				Predominantaly Course	Predominently Fine
FALLS			Rock fall	Debris fall	Earth fall
TOPPLES			Rock topple	Debris topple	Earth Topple
SLIDES	ROTATIONAL	FEW UNITS	Rock slump	Debris slump	Earth slump
			Rock block slide	Debris block slide	Earth block slide
	TRANSLATIONAL	MANY UNITS	Rock slide	Debris slide	Earth slide
LATERAL SPREADS			Rock spread	Debris spread	Earth spread
FLOWS			Rock flow (deep creep)	Debris flow	Earth Flow (soil creep)
COMPLEX			Combination of two or more principal types of movement		

Table 5. Summary of Great Lakes Coastal Soil Properties

Location	Unit Weight (kN/m^2)	Effective Strength Parameters c'(kN/m^2)	ϕ'(Deg.)	Source
Lake Erie				
Geography Field Stn.	22.4	35.0	26.0	Quigley & Tutt (1968)
	21.6	24.0	28.0	" "
	21.5	17.5	28.0	" "
Patrick Point	20.9	10.0	26.0	Quigley et al (1977)
	21.8	23.0	25.0	" "
Iona	20.4	6.0	26.0	" "
	20.9	0	30.0	" "
	21.8	23.0	25.0	" "
Pumping Station	20.4	15.0	28.0	" "
	21.3	9.0	28.0	" "
	21.8	14.0	34.0	" "
Lake Michigan				
Till 1A	19.6	0	34.6	Mickelson et al (1979)
Till 2A	18.6±0.6	0	31.1±0.1	" "
2B	18.5±0.6	0	31.4	" "
2U	18.7	0	30.5	" "
Till Ozaukee	17.9±0.4	0	31.4±0.8	" "
Haven	18.6±0.9	23.8±5.6	31.2±0.5	" "
Valders	17.7±1.2	28.3±6.9	29.3±0.6	" "
Glacio-Lacustrine Clays		4 to 60	26 to 29	Edil & Haas (1980)
Lake Superior				
Till Douglas Creek	18.2±0.5	50.0	26.4±3.0	Schultz (1980)
Hanson Creek	19.0±0.2	50.0	28.0	"
Jardine Creek	19.6	0	40.0	"
Madigan Beach Till-1	21.4	76.6	19.0	Edil et al (1979)
Madigan Beach Till-2	19.0	0	21.0	
Silty Sands, Sands	18.8-21.2	0	31-38	Schultz (1980)

Table 6. Ultimate Angle of Stability (in degrees)

ϕ' (°)	H_w/H				
	0	1/4	1/2	3/4	1
25	25	21.5	16.5	10.5	13
30	30	28.5	18.5	16	16
35	35	34	24	21	19

Table 7. ESTIMATES OF AMOUNT OF MATERIALS REMOVED FROM BLUFFS BY DIFFERENT PROCESSES (AFTER STERRETT, 1980)

SITE	PROFILE	TOTAL ANNUAL SOIL LOSS FT^3	SLUMPING	SOIL-FLUCTION	RILL EROSION/ SHEET-WASH
BENDER PARK	1	452	3%	93%	4%
	2	470	0%	91%	9%
	3	1167	60%	35%	5%
PORT WASH.	1	774	68%	23%	9%
	2	480	3%	96%	1%
	3	381	0%	70%	21%

Figure 1.
Hydrographs of Great Lakes Water Levels.

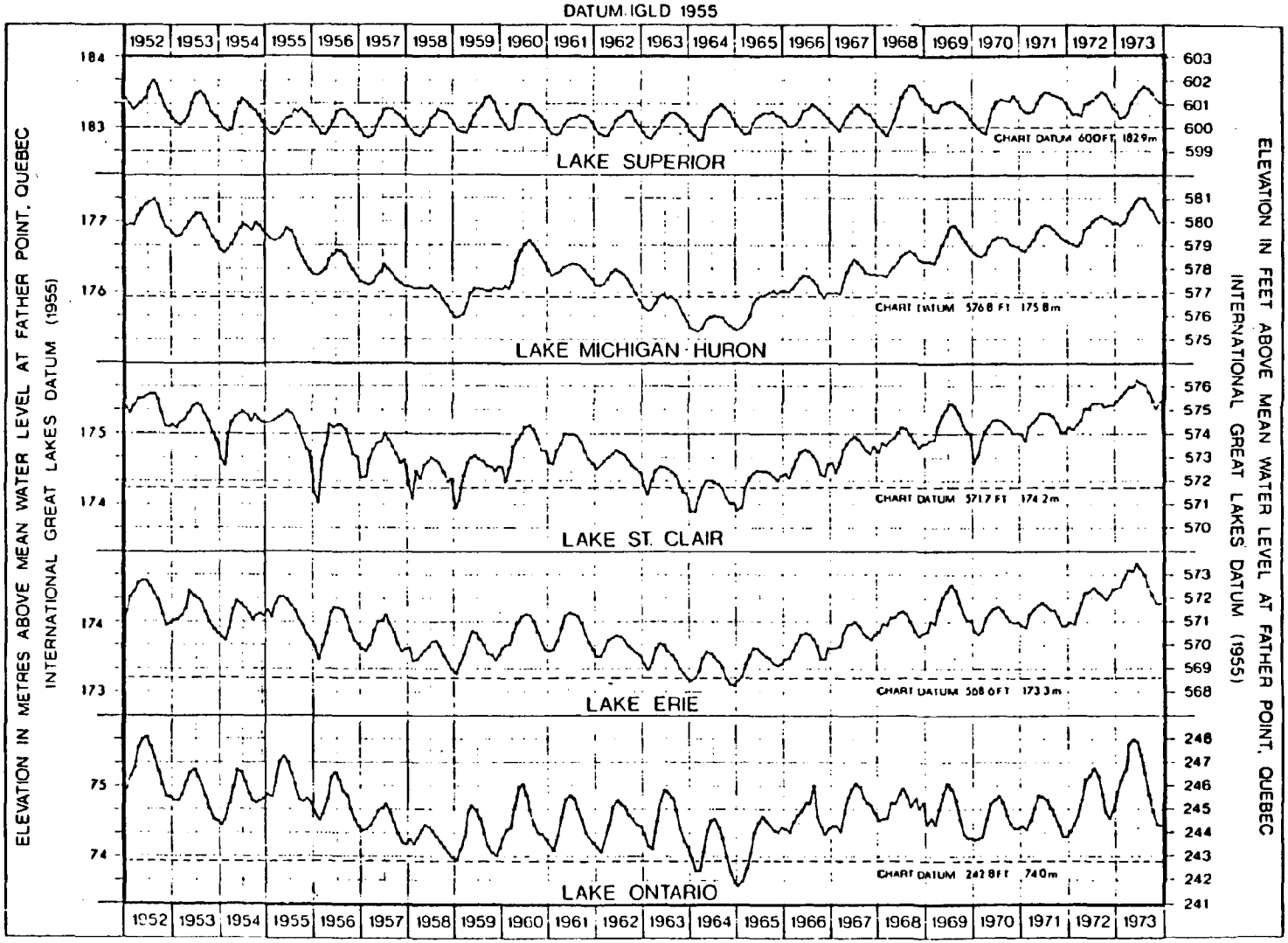

(from Environment Canada, 1975)

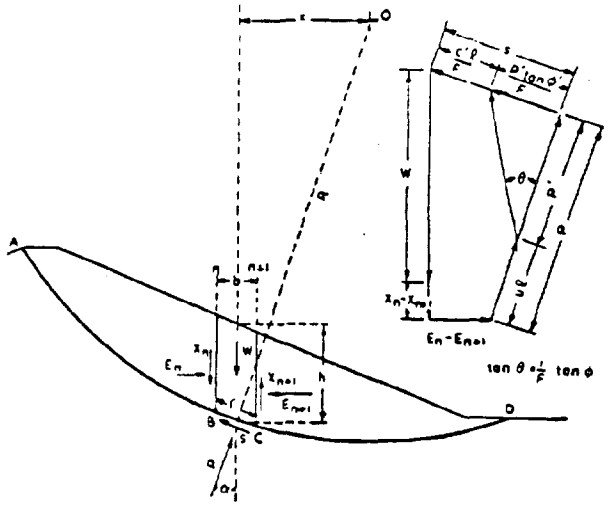

Figure 2. Forces Involved in Effective Stress Slip Circle Analysis

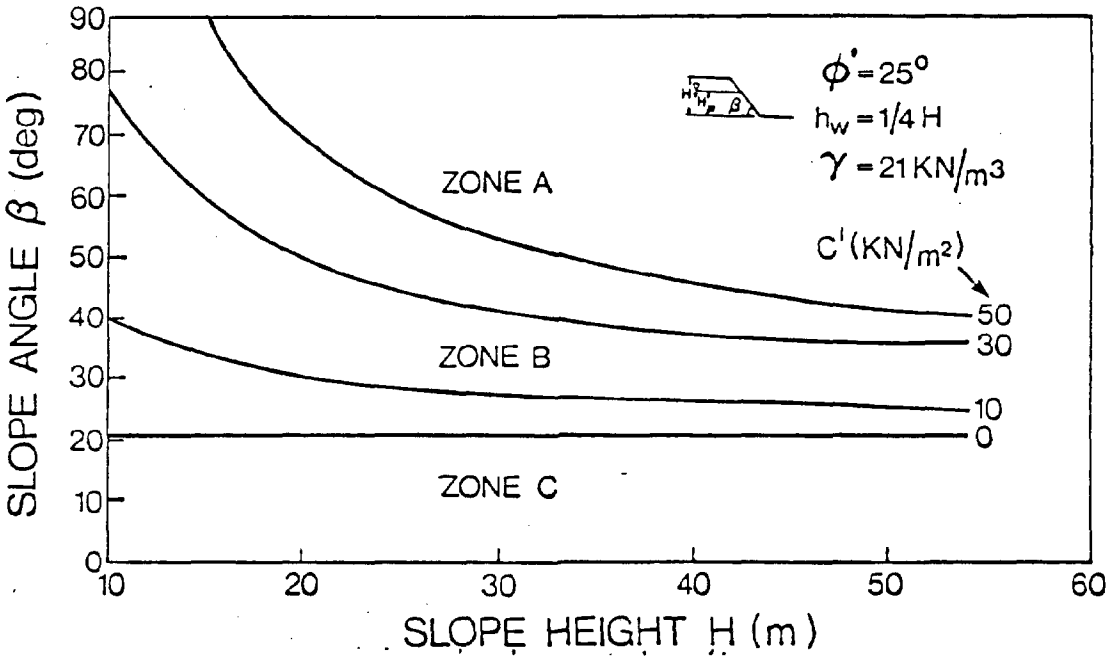

Figure 3. Stability and Slope Develpoment Chart

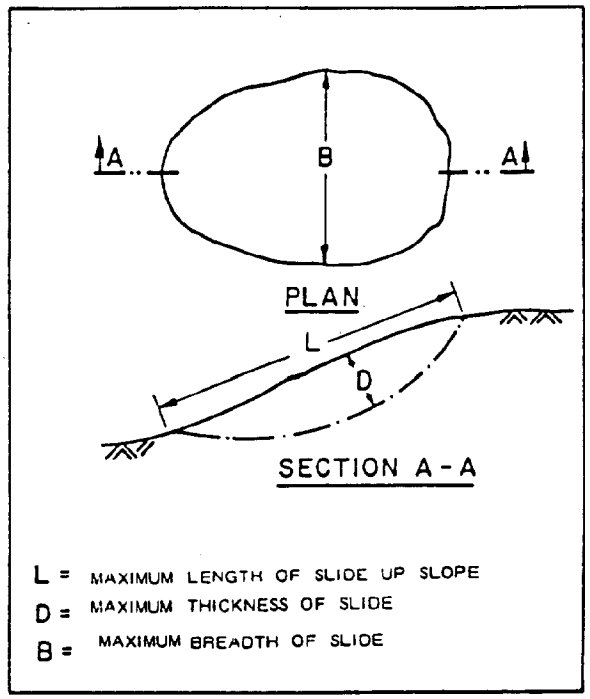

Figure 4. Landslide Proportions (after Skempton and Hutchinson,1969)

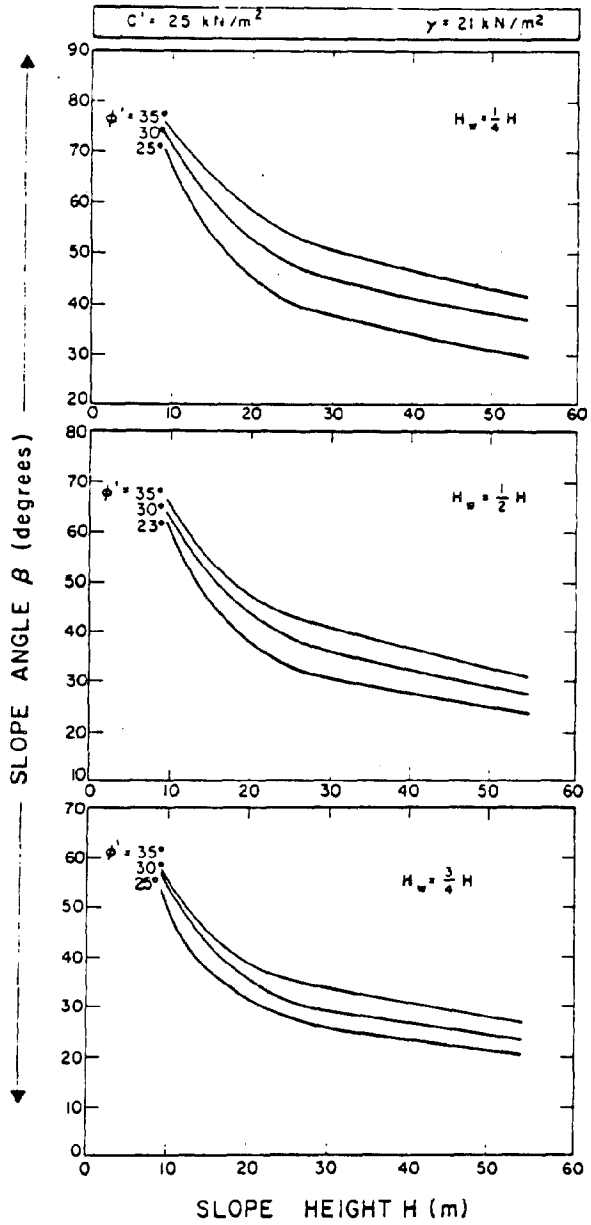

Fig.5. Influence of effective friction angle on stability for different water levels.

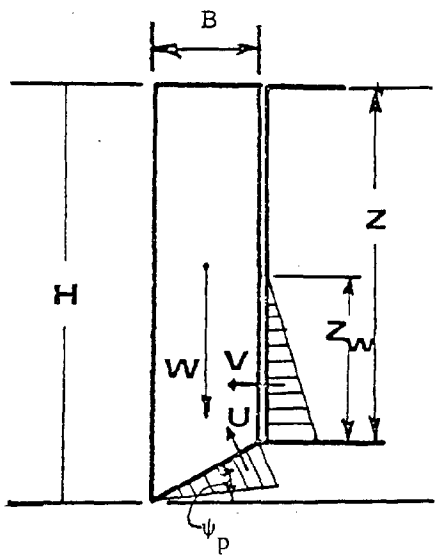

W = Weight of block

U = Water force on bottom of block

V = Water force on side of block

Z = Depth of jointing

Z_w = Depth of water in joint

Figure 6. Failure Block Analysis

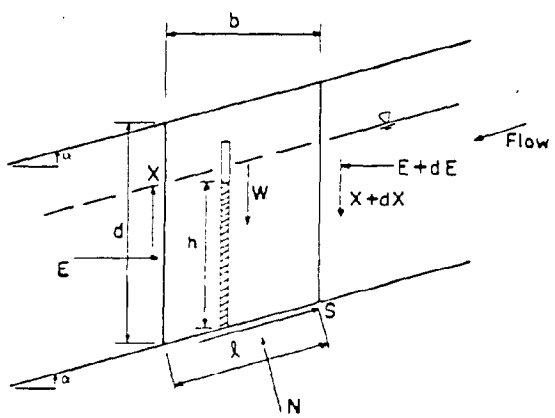

Figure 7. Forces Acting on an idealized Slice of Infinite Slope

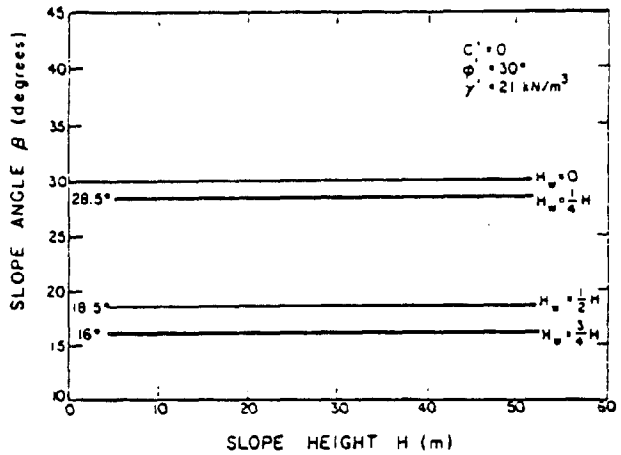

Fig.8. Influence of water level on ultimate angle of stability for a uniform slope.

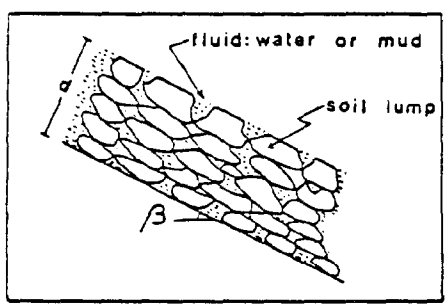

γ_f = UNIT WEIGHT OF FLUID

γ_s = UNIT WEIGHT OF SOIL LUMPS

C = VOLUME RATIO OF LUMPS

c'_r, ϕ'_r = RESIDUAL STRENGTH PARAMETERS

Figure 9. Solifluction

METHODS OF PREVENTING BLUFF RECESSION

prepared by

Ernest F. Brater

Department of Civil Engineering
University of Michigan
Ann Arbor, Michigan

Methods of Preventing Bluff Recession

E. F. Brater

Introduction

The principle objective of this paper is to outline and describe methods of preventing bluff recession. However, some preliminary discussion of shore processes is necessary to provide a better understanding of the function of the various protective measures. Of the more or less synonymous terms, shore erosion, beach erosion and bluff recession, the latter provides the most graphic description of the damaging phase of shore processes. Recession is started by the action of storm waves on the toe of the bluff. The material loosened by the waves is kept in suspension by the violent turbulence and carried away by the littoral currents created by the waves and the wind. The action of the waves leaves the lower face of the bluff in a potentially unstable condition. The bluff will eventually slump to a more stable slope. The slumping may occur while the storm is still in progress or the bluff may retain its steep slope for many months. The energy which causes the erosion is provided primarily by the wind.

The relative importance of the various factors are illustrated in Fig. 1 by the size of the blocks. A very important factor is the water level. During high levels the waves can more easily reach the bluff whereas during lower levels it may require a major storm for the waves to reach the bluff. On the lower Great Lakes, long term lake levels vary over a range of about 6.5 feet due to changes in long term precipitation. Shorter term changes in level are produced by wind, and to a lesser extent by local changes in barometric pressure. The effect of long term water surface elevations on erosion is illustrated by measurements at many locations along a 3-mile reach of Lake Michigan during three decades from 1938 through 1970. (Brater and Siebel, 1973).The average recession rates varied from less than 2 feet per year during periods of low levels to 8 feet per year during high levels.

In assessing the effectiveness of protective measures an important factor is the irregular occurrence of major storms. This is illustrated in Fig. 2 which shows all storms having waves of 5 feet or more in height on the east coast of Michigan's lower peninsula over a 46-year period. During 5 or 6 year periods no major storms occurred and while in other periods of the same length, many storms occurred. The wave heights shown in Fig. 2 are the significant wave heights which are the average of the largest one-third of a group of waves. Fig. 2 also shows the annual lake levels during the 46 years. The effectiveness and durability of a protective measure obviously cannot be judged until its life has extended into a period which includes major storms or above-average lake levels.

Preventing Bluff Recession

The intensive settlement and use of the coastal areas of the world without consideration of shore processes has produced vast losses of property and of the natural beauty of the shore line. Efforts to prevent damage to structures in vulnerable bluff areas has produced an unbelievably large variety of devices. Most of these are ugly and often neither durable nor effective. Some do more harm than good. The forces produced by waves in vulnerable areas are so great that the cost of complete protection

may exceed the value of the property. The use of lower cost procedures which will protect against the more frequent moderate storms and reduce the damage due to major storms may be economically feasible if protection is sufficiently well designed and well constructed to resist destruction by major storms. The following outline lists procedures for preventing shore damage according to their basic function.

Preventative Methods

1. Vacating vulnerable shore areas.

2. Creating a beach.
   a) Artificial nourishment.
   b) Artificial nourishment with groins.
   c) Groin systems.

3. Protecting the toe of the bluff from waves.
   a) Sea walls.
   b) Revetments.
   c) Breakwaters.

Vacate Vulnerable Shore Areas

Were it not for this first item in the outline of "Preventative Methods" the heading could have been "Protective Methods". Shore erosion and accretion are natural processes which cannot be easily modified. Vacating vulnerable property takes this fact into consideration. The method has the great advantage of retaining the natural beauty of the shore line while making it available for non-damaging recreational uses. In many locations where buildings, roads, or other structures have already been built in vulnerable shore areas the most economical solution may be to move the structures away from the edge of the bluff. In locations that are still natural, building can often be prevented by zoning or by making potential users aware of the rate of bluff recession.

Creating A Beach

A beach is one of the most efficient wave energy absorbers. Much of the energy is lost in the breaker zone and most of the remainder is lost when waves run up on the flat beach. Very little energy is reflected from the beach. Therefore, one of the most basic methods of protecting the toe of a bluff is to cause the waves to break on a beach well away from the bluff. The value of a protective beach is clearly demonstrated by the decrease in bluff recession rate during low water periods on the Great Lakes and by the rapid recession rates in areas where the beach is starved of its normal littoral drift by the presence of a jetty or inlet. This method also has the advantage of creating improved recreational conditions.

Artificial Nourishment - From an aesthetic point of view this is by far the best method of protection. However, the lack of sufficient beach material at the erosion site indicates that there is not sufficient natural littoral drift to maintain the beach. Therefore, the artificial nourishment will be gradually, or perhaps rapidly, moved away and then will have to be replaced.

Artificial Nourishment Plus Groins - Groins are low walls extending seaward from the bluff. Groins form pockets which tend to retain the sand. They are very effective even in areas of high wave energy. An advantage of groin systems over structures built parallel to the shore is that they interfere very little with the recreational use of the beach.

Groin Systems - Groin systems, without artificial fill, are very effective in areas having considerable littoral drift. They will often fill with sand during the first major storm. After they are filled the littoral drift will pass by as it did before they were built. However, during the time they are filling the downdrift shore area will not receive its normal littoral drift. If this appears to be a serious problem, it is necessary to fill the groins artificially.

Protecting the Toe of the Bluff

There are many locations where the structures cannot be moved back or where it is not feasible or even desirable to create a beach. In such locations bluff recession can be stopped only by preventing waves from attacking the toe of the bluff. When the toe is protected, the top of the bluff will continue to recede only until the face of the bluff has attained a stable slope.

Sea Walls - Sea walls are structures built parallel to shore usually of a solid material such as wood, steel, concrete or asphalt. More massive constructions are sand-filled tubes or bags, rock-filled wire cages or rubble mounds. Sea walls are built more often than any other method of shore protection. This is unfortunate because most sea walls tend to increase the erosion rate at the toe of the wall and, unless they are well designed and securely constructed, they fail more easily than other procedures. The increased erosion is due to the violent turbulence and strong littoral currents created as the waves strike and reflect from the smooth wall. The most common cause of failure is tipping or sliding lakeward due to back pressure from saturated soil. Vertical walls are the worst, but many of the same problems occur to some extent with sloping impermeable walls. Sea walls should only be used when no other method is feasible.

Revetments - Revetments are layers of rubble placed at the toe of the bluff after the bluff has been graded to a reasonably stable slope. A well designed and well built revetment is one of the very best methods of toe protection. One advantage of a revetment is that it tends to absorb rather than reflect the wave energy and therefore it does not accelerate erosion at the toe. Another advantage is that a revetment inhibits wave run-up and therefore does not have to be built as high as a smooth wall. Our experience has shown that it is possible to underdesign a revetment, to keep costs low, without as much danger of destruction during major storms as is true of other forms of protection. Finally, a well built rock revetment fits into the natural beach environment much better than a wall.

A revetment consists of a cover or armor layer of large stones placed on a foundation of one or more layers of smaller stones. The armor stones are designed for the particular wave height that can be expected at that location. The actual size depends not only on the wave height but also on the bluff slope and the shape and specific gravity of the stones. The purpose of the foundation is to prevent undermining of the armor stones by the penetration of jets from the impact of the waves. It is therefore very important that the foundation stones have a mixture of sizes. Revetments must be entrenched at the toe to prevent undermining and sliding.

Off-shore Breakwaters - One method of preventing wave energy from reaching the bluff toe is to use a breakwater to protect the area. However, the cost of off-shore breakwaters is so great compared with structures built near shore that this method is only used where there is a need to create a harbor or protect a high value structure. Breakwaters also interfere with navigation and littoral drift.

Some success has been observed during moderate storms in the use of a small permeable near-shore wall at a depth of only about one foot. These are usually accompanied by impermeable groins. The permeability of the wall (about 40 per cent) helps to mitigate the reflections and turbulence caused by solid walls.

Slope Stabilization

A bluff which has its toe protected from wave action is still subject to the less violent natural forces caused by surface runoff, wind and groundwater seepage. More serious erosion problems may also be caused by people, especially if they are allowed to use vehicles on the bluff. The less violent natural erosion can be reduced by reducing the steepness of the slope and encouraging vegetative cover. In the writer's experience a slope of 1-1/2 horizontal to 1 vertical is borderline and slopes of 2 to 1 or flatter are much more secure. In most areas, natural vegetation will cover such slopes but the process is often speeded up with artificial planting. At some locations, it is necessary to provide drains for the storm runoff from adjacent urbanized areas. If there are layers of clay or rock in the bluff, perched water tables may provide seepage over the exposed edges of the impermeable layers. If this is sufficient to cause a problem, it can be reduced by placing drains or wells landward of the face of the bluff.

Shore Protection Demonstration Project

An important contribution to the knowledge of low-cost protection procedures was made by the Michigan Shore Protection Demonstration Project which was funded by a grant from the Michigan Department of Natural Resources to the University of Michigan. The Michigan Sea Grant Program provided additional funds for observing the installations and for the published reports. The various reports and papers resulting from this project are listed in "Selected References." A revised copy Brater et al. 1977 is provided as an appendix to this paper. This particular report was selected for the appendix because it provides descriptions of the various installations as well as an outline of the laboratory research.

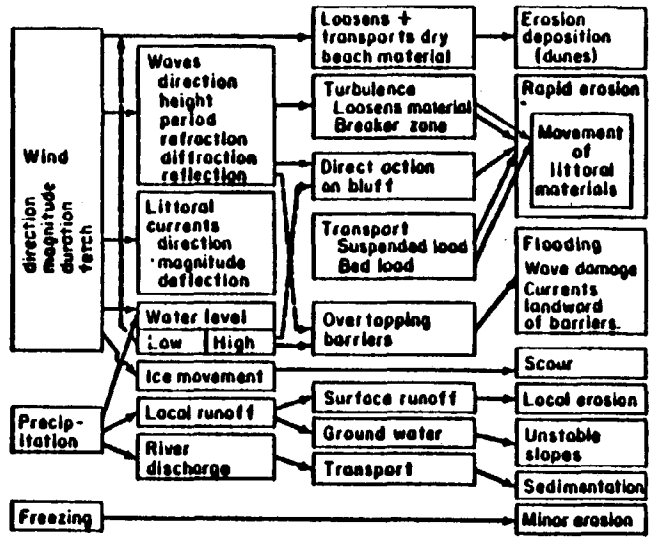

Fig. 1

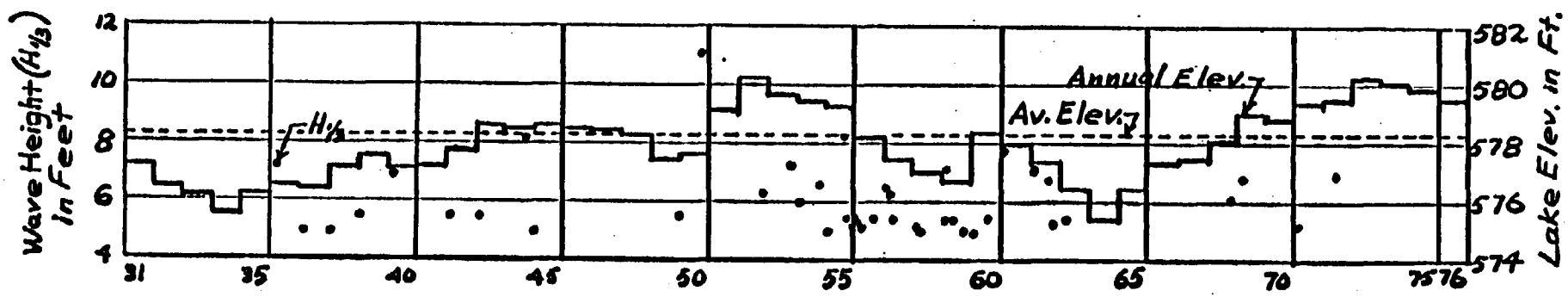

Fig. 2 - Storm Wave Heights and Lake Elevations

Selected References

1. Armstrong, J.M., (1976) "Low-Cost Shore Protection for the Great Lakes, A Demonstration/Research Project", Proc. 15th Coastal Engineering Conference, Amer. Soc. of Civil Engineers.

2. Brater E.F., (1979) "Observations on Low-Cost Shore Protection", Journ. of the Waterway, Port, Coastal and Ocean Division; Amer. Soc. of Civil Engineers, Vol. 105.

3. Brater, E.F., J. M. Armstrong and M. McGill, (1979) "The Michigan Demonstration Erosion Control Program in 1976", Michigan Sea Grant Report No. 55. Published with the assistance of the Michigan Department of Natural Resources and the Michigan Coastal Zone Laboratory.

4. Brater, E.F., N. Billings, and D.W. Granger, (1975) "Low-Cost Shore Protection for the Great Lakes", republished by the Michigan Department of Natural Resources.

5. Brater, E.F. and M. Cortright, (1976) "Beach Erosion in Michigan, A Historical Review." Published by the Michigan Department of Natural Resources.

6. Brater, E.F., and H.W King, (1976) Handbook of hydraulics, 6th Ed., McGraw-Hill Book Co., Inc., New York.

7. Brater, E.F., and C.D. Ponce-Campos, (1981) "The Michigan shore protection project final report", Michigan Sea Grant Report No. MICHU-SG-81-203.

8. Brater, E.F., and C.D. Ponce-Campos, (1978) "Coastal Engineering and Erosion Protection, Report for the year 1976-77", Michigan Sea Grant Technical Report No. 59.

9. Brater, E.F. and D.C. Ponce-Campos, (1976) "Laboratory Investigation of Shore Erosion Processes", Proc. 15th Coastal Engineering Conference, Amer. Soc. of Civil Engineers, Vol. IV, 1976.

10. Brater, E.F., and E. Siebel, (1973) "An Engineering Study of Great Lakes Erosion in the Lower Peninsula of Michigan", Published by Michigan Water Resources Commission, Dept. of Natural Resources, State of Michigan.

11. U.S. Army Corps of Engineers, Coastal Engineering Research Center, (1977) "Shore Protection Manual."

SELECTED PAPERS

ASSESSMENT OF THE EFFECTIVENESS OF CORRECTIVE MEASURES IN RELATION TO GEOLOGICAL CONDITIONS AND TYPES OF SLOPE MOVEMENT

by

J. N. Hutchinson

Reprinted from:
Norwegian Geotech, Institute
Publication 124
Oslo 1978

NORWEGIAN GEOTECH INST

PUBLICATON NO. 124

OSLO 1978

ASSESSMENT OF THE EFFECTIVENESS OF CORRECTIVE MEASURES IN RELATION TO GEOLOGICAL CONDITIONS AND TYPES OF SLOPE MOVEMENT

EVALUATION DE L'EFFICACITE DES MESURES DE STABILISATION PAR RAPPORT AUX CONDITIONS GEOLOGIQUES ET AUX TYPES DES MOUVEMENTS DU TERRAIN

HUTCHINSON J.N., Imperial College of Science and Technology, London, United Kingdom

Summary:

The General Report consists of three parts. In Part 1, the various types of corrective measures are briefly reviewed. Attention is then concentrated on the two, most used measures; modification of the slope profile by excavation and filling, and drainage. An analysis is made of the optimum positioning of corrective cuts or fills, making use of the influence line concept, borrowed from structural engineering. In this way a neutral point, neutral line and neutral zone are defined for circular and non-circular landslides and for various values of $\bar{B}$ with respect to the applied change in total stress. Drainage is then discussed in more detail, with particular attention being given to horizontal drains and to trench (and counterfort) drains. Performance data for treuch drains in the U.K. are then revieved and analysed. From this a tentative basis for design is developed. The clogging of drainage systems by siltation or by geochemical effects, is also discussed.

In Part 2 the papers contributed to Theme 3 of the Symposium are reviewed. Finally, in Part 3, some suggestions are made as to the desirable directions of future research. An extensive list of references is provided.

Résumé:

Le Rapport Général se compose de trois parties. Dans la première partie les différentes mesures de stabilisation sont brièvement examinées. L'attention est ensuite portée sur les deux mesures les plus courantes: la modification du profil de la pente par excavation et remblayage, et par drainage. Une analyse est faite de l'emplacement optimal des tranchées ou des remblais de stabilisation qui utilise le concept de la ligne d'influence emprunté au génie structural. De cette manière un point neutre, une ligne neutre et une zone neutre sont définis pour les glissements de terrain circulaires et non-circulaires ainsi que pour des valeurs diverses de $\bar{B}$ en tenant compte du changement apporté à la tension totale. Le drainage est ensuite discuté de façon plus approfondie en insistant plus spécialement sur les drains horizontaux et les drains tranchés (et contreforts) en particulier. Les résultats d'essais sur l'utilisation de drains tranchés dans le Royaume Uni sont présentées et analysées. A partir de ces données une tentative de mise au point de drains tranchés est developpée. Le colmatage des systèmes de drainage par dépôt de limon et par effets géochimiques est également discuté.

Dans la deuxième partie les contributions écrites du Sujet 3 sont discutées. Enfin, dans la troisième partie sont préesentées des suggestions sur l'orientation à donner aux futurs projets de recherches. Une liste détaillée de références est donnée.

This paper was the General Report of Theme 3 at the Symposium on Landslides and other Mass Movements, Prague, September 1977, and was published in the Bulletin of the International Association of Engineering Geology, No. 16, 1977, p. 131 - 155.

Introduction

In view of its context, this General Report concentrates on the stabilisation of slopes consisting of soils and rocks in their natural state, in either natural slopes or cuttings, and excludes ones that comprise chiefly fills.

The theme chosen by the Organising Committee is a good one. It directs our attention specifically towards the assessment of the efficacy of stabilization measures, which a reading of the literature shows to have been a matter largely neglected hitherto. This situation has doubtless arisen partly from a natural desire to close the file on a job and partly from the reluctance of the client or owner to accept continuing expenditure on long-term monitoring.

In accordance with the wishes of the Organising Committee, the General Report consists of three parts. The first reviews the main aspects of the theme in the light of the present state of knowledge, the second evaluates the contribution of the submitted papers while in the third, suggestions are made as to the nature of the still unsolved problems and the direction of future research.

1 - REVIEW

General

Many general reviews of methods of slope stabilization have been made. Some of the more recent are by Root /1953, 1958/, Baker & Marshall /1958/, Brawner /1959/, Mehra &Natarajan /1966/, Záruba & Mencl /1969/, Duncan /1971, 1976/, Schweizer & Wright /1974/, Smith /1974/ and Broms /1975/. A useful review of methods particular to rock slopes is provided by Peckover & Kerr /1976/.

The main methods of stabilization used are summarised briefly below. They may be employed singly or in combination.

1. Excavation & filling

a/ Excavate at toe until stability is attained : a crude method which relies on stimulating retrogression of the slide until its average slope is sufficiently gentle to be readily maintained. Large quantities of excavation are generally involved. The classic application of the method is in the Culebra reach of the Gaillard Cut on the Panama Canal /Lutton & Banks,1970/.

b/ Remove and replace slipped material: either wholly by free-draining material /Symons,1970/ or, more economically, by recompacted slip debris provided with drains /Newman,1890; Duncan,1971/. The method is obviously applicable only to slips of modest size. A variant of this method is to destroy pre-existing shear surfaces at shallow depths by digging out, remoulding and recompacting the excavated material /Weeks, 1970/.

c/ Excavate to unload slope: either by a general flattening, with or without berms /Baker & Marshall,1958; Broms,1969/, or locally at the head of a slide /Peck & Ireland,1953; Lutton & Banks,1970/. As discussed later, it is important that such excavations are correctly positioned.

d/ Filling to load slope: generally by means of berms, possibly combined with other gravity structures, such as a gabion or reinforced earth walls, at its toe /Viner-Brady, 1955; Broms, 1969; Early & Skempton,1972; Záruba & Mencl,1976/. Again the correct positioning of stabilising fills is of great importance, as is their proper drainage. The disturbing effects of embankments that have, unavoidably, to be placed in destabilizing positions can be reduced by the use of light-weight fills, such as fly-ash.

2. Drainage /Cedergren,1967, 1975; Rat,1976/

a/ Lead away surface water: this should generally be done immediately /Záruba &Mencl,1969/.

b/ Prevent the build-up of water in tension cracks: this should also be attended to straight away /East,1974/. Attempts to seal such cracks against surface inflow usually fail, as any seal will tend to be broken by the slightest further movement. It is better, therefore, to make arrangements to drain cracks.

c/ Blanket slope with free-draining material, with filters as necessary: This combines measure 1 /d/ with drainage /Root, 1958/ and is particularly effective in the case of slopes exposed to rapid drawdown /Skempton,1946; Finzi & Niccolai,1961; Cedergren,1967; Klengel et al. 1974/.

d/ Trench drains: these are generally narrow* and aligned directly downslope /Early & Skempton,1972/, thus largely avoiding the risk of reactivating the landslide being treated. They are sometimes supplemented by shallower drains laid in a chevron or herring-bone pattern /Duvivier,1940/. An earlier version of the trench drain is the counterfort drain. In this the invert is located in firm ground beneath the slip surface so that, in addition to reducing ground-water pressures, the drains also provide some mechanical support /Gregory,1844; Collin,1846/. Open or gravel-filled drain trenches running cross-slope are sometimes built above the crest of a slip or slope, when they are usually termed interceptor or cut-off drains /Toms & Bartlett,1962; Smith,1964/. Shallow ones merely intercept surface run-off; deeper ones are intended to intercept ground-water flowing towards the slope. A deep cut-off trench, extended downwards by drain holes into a drainage gallery, was constructed at the head of the colluvial slope being stabilized at Weirton /D'Appolonia et al.,1967/. Care must be taken to avoid siting cut-off drains so that they could act as a tension crack in any future landslide.

e/ Horizontal drains: usually drilled into a slope on a slightly rising gradient and provided with perforated or porous liners /Smith & Stafford,1957; Root,1958; Robinson,1967; Henke, 1968; Nonveiller,1970; East,1974; Tong & Maher,1975; Brandl,1976/. The maximum practicable length of such drains is generally around 100 m, though one 231 m long is reported by Záruba & Mencl /1976/. Lengths of up to about 60 m are more common. In slides of large scale, horizontal drains can be used to advantage in conjunction with vertical drainage shafts /Nat. Conf. Landslide Control,1972/, with trench drains /La Rochelle et al.,1976/, or with galleries /see 2f below/. In cold climates it may be necessary to prevent the outlets of horizontal drains from freezing /Golder,1971/.

f/ Galleries: expensive, but can be appropriate to use in the treatment of very large slides /Viner-Brady,1955; Kezdi,1969; National Conf. Landslide Control,1972; Rico et al.,1976/. Supplementary drainage borings can be made through the sides, floor or roof of the galleries as required /Taniguchi & Watari,1965; Rodriguez et al.,1967; Záruba & Mencl,1969; Hoek & Bray,1974; Nilsen & Lien,1976/. For galleries running parallel to the slope face, Sharp /1970/ has made a study of the optimum locations for various ratios of horizontal to vertical permeability, using a variable resistance analogue.

g/ Vertical drains: these may discharge by gravity through horizontal drains or adits /well-drains/ /Seaton, 1938; Palmer et al. 1950; Sherrell,1971; Rat,1976/, by siphoning, within the normal limitation of depth /Root,1958/, or by automatically activated pump /National Conf. Landslide Control,1972; Hoek & Bray,1974/. Alternatively, the water may be blown out of the wells at intervals by compressed air. Under favourable hydrogeological conditions it is sometimes feasible to discharge downwards into an underlying aquifer at lower piezometric pressure /Parrott,1955; Wilson,1961/. In some cases, however, such measures have led to fresh stability problems associated with the under-draining stratum /Záruba & Mencl,1969; Lefebvre & Lafleur,1976/. Vertical drains may also be used as relief wells, discharging upwards, to lessen artesian groundwater pressures at depth. The use of sand drains in this way, to stabilize a slope of quick clay, is described by Holm /1961/.

* Wider drains, in which a bulldozer can operate, are used in the U.S. /Root,1958/.

h/ Electro-osmosis: used in the drainage of low permeability soils, even some clays. Water migrates from anodes towards cathodes, whence it is removed, with or without pumping /Casagrande et al.,1961; Bjerrum et al.,1967; Mitchell,1970; Wade,1976/.

j/ Vegetation: acts chiefly through reduction of pore pressures by evapo-transpiration. Záruba & Mencl /1969/ point out that in this, and other respects, deciduous trees are superior to conifers. There is also some contribution at shallow depth from the strength and binding action of the roots /Toms,1948; van der Burgt & van Bendegom,1948; Mehra & Natarajan,1966; Záruba & Mencl,1969; Gray,1970, 1974; Brown & Sheu,1975; Colas et al.,1976/. In addition, a vegetation cover affects the amount of infiltration /Hills,1971; Rodda et al.,1976/. The role of vegetation in controlling surface erosion is mentioned in 5b/ below.

3. Restraining structures

The use of rigid restraining structures is generally less appropriate than that of methods involving drainage or reshaping of the slope. Numerous cases of failure of such structures are reported by Root /1958/ and Baker & Marshall /1958/. When properly engineered, however, they can have a useful role, particularly where space is restricted.

a/ Retaining walls, founded beneath the unstable ground: some indication of the great variety of designs used is given by Root /1958/, Baker & Marshall /1958/, Záruba & Mencl /1969/ and Costa Nunes /1969/. Bujak et al. /1967/ describe the stabilisation of a rock slide by means of a concrete retaining block, held down by prestressed rock anchors and supporting a toe fill. In this case the efficacy of the corrective measures was checked by monitoring.

b/ Piles: a wall of continuous or closely spaced driven cantilever piles can be effective in stabilizing shallow slides /Toms & Bartlett,1962; Záruba & Mencl,1969/. More deep-seated slides have been successfully stabilized by, for instance, anchored sheet or bored pile walls /D'Appolonia et al.,1967; Brandl, 1976; Záruba & Mencl 1976/ or by large diameter cylinder pile retaining walls, generally of cantilever type /Andrews & Klasell,1964; De Beer,1969; Wilson,1970; De Beer & Wallays, 1970/. A general discussion of this type of structure is given by North-Lewis & Lyons /1975/. A particularly massive design, employing anchored foundation piers 30 to 35 m deep and 13 m in diameter at 24 m centres to stabilize a rock slope in Italy, is described by Baldovin & Fattore /1974/. In slopes of soft clay, there is a danger that the displacements and excess pore-water pressures induced by pile-driving will trigger a landslide /Bjerrum & Johannessen,1960; Broms & Bennemark,1968/.

c/ Soil and rock anchors, generally pre-stressed: these are employed either in conjunction with retaining structures, as in 3a/ & b/, or alone to reduce the driving forces of a landslide and to increase the normal effective stresses on its slip surface. For a planar slide, it can readily be shown that, for a given anchor force P, the maximum improvement of the factor of safety of the slide is achieved when P is inclined towards the slope at an angle with the slip surface equal to $\tan^{-1}\left(\frac{\tan \phi'}{F}\right) = \phi'_{mob}$. This result is independent of the magnitude of c', and of the ground-water pressures obtaining.

Anchors have been perhaps most commonly used on translational rock slides /Záruba & Mencl,1969; Hoek & Bray,1974; Baldovin & Fattore,1974; Lang,1976/. They can also be used to stabilize soil slides /Cambefort,1966; Costa Nunes 1966/. Allowance must then be made for short-term excess pore-water pressures and subsequent consolidation under the anchor pads with concomitant losses in anchor stress. Anchors are also coming into increasing use in open pit mines, particularly in America, for example to permit semi-permanent slopes to be cut more steeply /Barron et al.,1971; Littlejohn et al.,1977/. Another application is in the securing of large boulders, for instance in slopes of residual soil /Costa Nunes & Velloso,1963/. Cables or chains may also be used for this purpose /Bjerrum & Jørstad,1968/. Rock bolts are used for stabilisation of shallow instability in rock faces /Lang,1961; Price & Knill,1967/, together with other measures /Fookes & Sweeney,1976; Peckover & Kerr,1976/. Information on the long-term behaviour of pre-stressed anchors, especially with regard to stress losses through creep and corrosion, is sparse.

4. Miscellaneous methods*

a/ Grouting: a classical use of this is to reduce the permeability of the ground in order to reduce the ingress of ground-water to a landslide /Mitchell,1970; Matsubayashi,1972/. Cement grouting, usually aerated, has also been shown to be effective when injected into the slip surface of slides in cutting slopes of stiff clay /Ayres,1961/ and in other materials /Duncan,1971; Záruba & Mencl,1969/. If done without care it can, of course, trigger a slide.

b/ Chemical stabilization: by ion exchange and other processes. In the present connection it is deep soil stabilization rather than surface treatment that is relevant. Handy & Williams /1967/ claim to have stabilized a slide by the introduction of quick lime into the sliding zone through lime wells, partly by pozzolanic effects and partly through drying. Moum et al. /1968/ question the efficacy of lime wells but suggest that the diffusion of various salts through wells may be a practicable stabilization method. For the quick clay that they investigated, potassium chloride had the best overall effect. An application of potassium chloride diffusion in practice is described by Eggestad & Sem /1976/. Some theoretical background is given by Mitchell /1976/.

c/ Suppression of natural electro-osmosis: a method of slope stabilization described in several papers /e.g. 1968, 1973/ by Veder. Under certain conditions it is claimed that ground-water pressures can be reduced by the insertion of „short circuit electrodes", which suppress an inherent, naturally occurring electro-osmosis in the ground. Several landslides in Austria and Italy are stated to have been stabilized in this way: the method does not appear to have been evaluated yet in the U.K. or the U.S.A. Veder /pers. comm./ points out that the principle is evidently inapplicable to cases where the ground-water pressures are controlled by infiltration under gravity through very permeable layers.

d/ Electro-osmotic anchors: a technique suggested under the name „electro-osmotic tie-backs" by Casagrande & McIver /1971/ for improving the stability of tailings dams. It may also be of more general application in fine-grained materials.** Impressive increases are reported in the pull-out resistance of thin steel rods pushed into the ground and then used as electrodes in a direct current system for 1 to 2 weeks. In the soils tested both electrodes showed an increase in pull-out resistance, though this was naturally more marked at the anodes.

e/ Freezing: expensive and rarely used. The best known application is in temporarily stabilizing a flow of silt during construction of the Grand Coulee Dam /Gordon,1937/. Use of the method in stabilizing a slide in a tunnel roof is described by Gunleiksrud /1968/. A general review of the technique is given by Sanger /1968/.

f/ Heating: in the course of railway construction in 19th century England, it was a fairly common practice to stabilise the slopes of clay cuttings by „burning". Wide counterfort drains were dug and filled with alternate layers of clay spoil and coal. The coal was then ignited, thus baking the intermixed and the adjacent clay /see, for example, Copperthwaite,1880/. Although particularly advantageous when applied to clays and shales of high carbonaceous content, which were virtually self-firing, the technique was also used in non-carbonaceous clays such as the London Clay. More recently, unstable slopes of loess and

* Some of these may still be regarded as being in an experimental stage.

** The technique may be of use in the construction of reinforced earth walls with clayey backfills.

of clay have been stabilised by passing hot gases through a system of tunnels or boreholes /Hill,1934; Beles & Stanculescu, 1958; Litvinov et al.,1961; Záruba & Mencl,1969; Mitchell, 1970/. Litvinov et al. also mention a technique combining heating with chemical treatment, which they term thermo-chemical stabilisation.

g/ Blasting: a controversial and unreliable technique, intended to disrupt a slip surface or to improve drainage /Root,1958; Baker &Marshall, 1958; Záruba &Mencl, 1969; Mitchell, 1970/.

h/ Bridging: a technique occasionally used to carry a road over an active or potential landslide. It is more often employed on steep slopes affected by translational slides of moderate or small width /Root, 1958; Baker & Marshall, 1958; Záruba & Mencl, 1969; Costa Nunes, 1969/.

5. Erosion Control

The close link between mass movements and erosion is a basic element in the geological cycle of denudation. It follows, therefore, that the control of erosion, in both the general and the specific sense, is fundamental to the prevention of landslides. This point has been emphasised by Bjerrum et al. /1969/ and by Hutchinson /1973/. Furthermore, once a landslide has been stabilized it is important to prevent any further worsening of its condition through erosion. The potential eroding agent is usually water, though erosion by wind and other agencies can occasionally be significant /e.g. Colenutt,1928/.

a/ Control of toe erosion: in cases where the toe of a landslide is situated in the sea, a lake, a reservoir or a river, it is of prime importance to prevent erosion at this most critical point. Measures commonly used include concrete or crib walls, rip-rap and other revetments, groynes and spur dikes /Viner-Brandy,1955; National Conf. Landslide Control,1972/.

b/ Control of surface erosion on slopes: generally achieved through proper attention to the design of drains for surface water /Mehra & Natarajan,1966/ and the encouragement of suitable vegetation cover /Barata,1969/. The latter was done originally by topsoiling and seeding, sometimes in combination with jute netting to prevent soil erosion while the vegetation was becoming established /Mehra et al.,1967/. More recently various techniques of hydraulic seeding, in which a mulch containing the plant seeds is sprayed onto the slope, have been developed /Schiechtl, 1965/. In these the necessary interim erosion protection is often provided by asphalt emulsion, or other chemical or plastic admixtures. A layer of soil-cement has sometimes been used as a semi-permanent control of surface erosion /Costa Nunes & Velloso,1963/.

c/ Control of seepage erosion: this type of erosion occurs when the seepage drag of ground-water discharging at a free face is large enough to dislodge and remove individual soil particles. The resultant back-sapping tends to undermine the superincumbent strata and eventually to cause their collapse. This form of failure is quite common in both natural and cut slopes, and can be very damaging. Soils in the coarse silt to fine sand range are particularly prone to it /Terzaghi,1950; Hutchinson, 1968/. The free face may also, under certain conditions, migrate into the slope in a localized manner, leading to piping by subsurface erosion /Terzaghi & Peck,1967; Sherard et al.,1972/. The chief method of controlling seepage erosion is by placing inverted filters over the area of discharge /Ward,1948; Terzaghi & Peck,1967/, or by intercepting the seepage at some distance back from the face with wells or sand drains /Anon,1965/.

From this brief review of types of corrective measure, two points emerge. The first is that, while most of the papers suggest that the measures applied were effective, at least in the short term, it is rather rare for the efficacy of the corrective works to be properly assessed by appropriate monitoring. The second is that drainage appears to be the most generally used stabilization measure, with the modification of slope profile by cutting and filling also frequently employed. Thus, in the remainder of this paper, attention is concentrated on these two corrective methods.

Modification of slope profile by excavation and filling

General remarks

The respective merits of removing the head of an actual or potential slide, of flattening the slope uniformly or benching it, or of building a berm at its toe, are discussed by Baker & Marshall /1958/, Root /1958/ and Mehra & Natarajan /1966/. In general, such cuts and fills would appear to be most effective when applied to deep-seated landslides, in which the slip surface tends to fall steeply at the head and rise appreciably in the region of the toe. Clearly, however, there is also a scale effect, so that the influence of a given cut or fill on the overall factor of safety will diminish with the size of the landslide being treated. For example, in the case of the large deep-seated coastal landslides at Folkestone Warren the toe-weighting constructed as part of the stabilization works /Viner-Brady,1955/, although well positioned, improves the overall long-term factor of safety by only about 3.5 to 5%*.

It is, of course, very important to ensure that neither cuts nor fills trigger the existing or potential slide that they are designed to stabilize, nor generate fresh slides local to themselves. It should also be borne in mind that a fill is a rather specific measure and while it may deal satisfactorily with the particular slide that it was designed to stabilize /abc on Fig. 1/, it may be quite ineffective against an almost equally serious „over-rider" slide /on abd/. The danger is greatest in the case of translational landslides, as illustrated in Fig. 1: the geometry of rotational slides makes them less prone to, though not necessarily safe from, this type of failure.

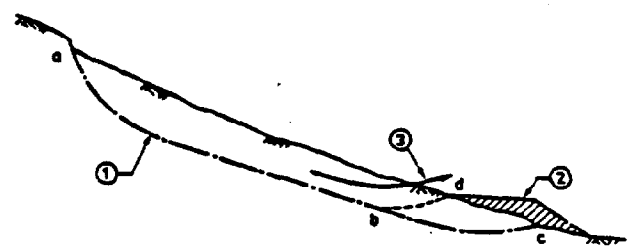

Fig. 1 : Translational slide stabilized by a toe fill, showing the danger of a potential over-rider slide.
(1) Slip surface. (2) Toe fill. (3) Over-rider slide.

A point frequently neglected in the literature on slope stabilization is that cuts and fills, depending on the ground condition and the speed of their construction, comprise more or less undrained unloadings and loadings respectively. The matter is clearly presented by Bishop and Bjerrum /1960/. Thus in the case of a fill, the value of the factor of safety, F, will generally be less in the short-term than in the long-term. The opposite will usually apply in the case of cuts. In both cases it is good practice to check both the short- and long-term values of F. An important advantage of a corrective fill is that, once successfully placed, its stabilizing effect will tend to increase until the ground beneath it is fully consolidated and thereafter, unless by some accident the fill is removed, its contribution to stability will be a permanent one**. As discussed later, this reliability in the long-term is generally less assured in the case of drainage measures.

The „neutral line" concept

The efficacy of a corrective cut or fill is controlled by its location, weight and shape and by the characteristics of the actual or potential landslide that it is intended to stabilize. These factors are all known, or can be determined, at the design stage. It follows, therefore, that while it is advisable to check their performance by appropriate monitoring during and after construction, the efficacy of cuts and fills should first be determined by analysis before they are carried out.

* Calculated for sections W6 and W8 of Hutchinson /1969/.

**Provided that proper drainage of the fill has been arranged, for example by an underlying drainage blanket and by appropriate surface drains.

In structural engineering design a familiar device is to consider that an „influence load" of some convenient magnitude passes over a structure, for instance a bridge, and to determine the resulting „influence lines", typically for bending moments and shear forces at any point, as a function of the position of this load on the structure. The same idea may be applied to a landslide, to determine influence lines for changes in its factor of safety produced by an influence load moving across it.

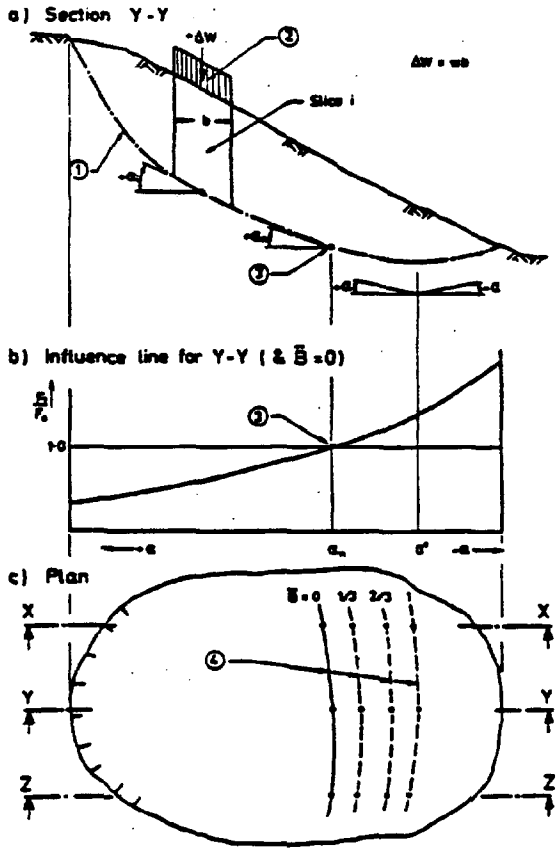

Fig. 2 : a) Cross-section of a landslide, with an influence load Δ W acting.

b) Influence line (diagrammatic) for the effect of Δ W on the overall factor of safety of the landslide.

c) Plan of the landslide, showing diagrammatically the positions of the neutral lines for different B̄ values.

(1) Slip surface. (2) Influence fill. (3) Position of neutral point (drawn for B̄ = 0). (4) Positions of neutral line, for different B̄ values.

Consider, for simplicity, a slope that can be represented two-dimensionally by the cross-section in Fig. 2a. If a convenient, arbitrary influence load, Δ W, is now assumed to act, in turn, at successive positions between the head and toe of the landslide, we can derive an influence line for the resulting effect on the overall safety factor, as indicated in Fig. 2b. The ratio

$$\frac{F_1 (= F_0 + \Delta F), \text{ the overall F with } \Delta W \text{ acting}}{F_0, \text{ the original value of F}}$$

is taken as a convenient measure of this effect.

An influence load representing fill, with Δ W positive and acting downwards, will of course tend to decrease the existing factor of safety, F_0, when it acts in the vicinity of the head of the slide and to increase this when it acts near the toe. Of particular interest is the point where Δ F = 0, or $F_1/F_0 = 1.0$, termed the NEUTRAL POINT, which indicates where an influence load will have no effect on F_0. The trace of the neutral points in plan is termed the NEUTRAL LINE /Fig. 2c/ and this forms the boundary between the area of the landslide on which a fill /or cut/ would improve its stability and the area for which the reverse would hold.

Determination of the location of the neutral point

Let the slip surface /Fig. 2a/ be of general shape, with effective shear strength parameters c' and Ø'. Let the influence load, in the first instance, represent a uniformly distributed fill, of intensity w per unit of horizontal area, acting on a slice, i, of horizontal width b. Thus Δ W = wb. Now in the general case, application of this load will set up undrained pore-pressures on the subadjacent slip surface, of magnitude $\Delta u = \bar{B} \cdot \Delta\sigma_1 = \bar{B}.w$. If, following Skempton & Hutchinson /1969/, we apply the Conventional Method to this non-circular slip surface, and let

$$F_0 = \frac{\Sigma \text{ available resisting forces}}{\Sigma \text{ driving forces}} = \frac{\Sigma R_0}{\Sigma D_0}$$

the new factor of safety F_1 will then be

$$F_1 = \frac{\Delta N_i' \tan \emptyset' + \Sigma R_0}{\Delta W \sin \alpha_i + \Sigma D_0}$$

where α_i is defined in Fig. 2a and $\Delta N_i'$ is the change in effective normal force produced on the base of slice i by the influence load Δ W, given by

$$\Delta N_i' = \Delta W (\cos \alpha_i - \bar{B} \sec \alpha_i)$$

Hence

$$\frac{F_1}{F_0} = \frac{\Sigma D_0 [\Delta W \ (\cos \alpha_i - \bar{B} \sec \alpha_i) \tan \phi' + \Sigma R_0]}{\Sigma R_0 (\Delta W \sin \alpha_i + \Sigma D_0)}$$

Now, at the neutral point,

$$\frac{F_1}{F_0} = 1 \quad \text{and } \alpha_i = \alpha_n \text{ (Fig. 2a)}$$

The position of the neutral point is thus given by

$$\tan \alpha_n = (1 - \bar{B} \sec^2 \alpha_n) \frac{\tan \phi'}{F_0} \qquad (1)$$

Alternatively, the Bishop Simplified Method /Bishop,1954/ may be used as the basis for the analysis. Then, with the symbols used in that paper,

$$F_0 = \frac{1}{\Sigma W \sin \alpha} \Sigma \left\{ [c'b + \tan \phi' (W - ub)] \ \frac{\sec \alpha}{1 + \frac{\tan \phi' \tan \alpha}{F_0}} \right\}$$

Hence, putting

$$[c'b + \tan \phi' (W - ub)] = J, \text{ and } \frac{\sec \alpha}{1 + \frac{\tan \phi' \tan \alpha}{F_0}} = M_0$$

$$F_0 = \frac{1}{\Sigma W \sin \alpha} \Sigma (JM_0)$$

Then the new factor of safety, with Δ W acting on slice i, is

$$F_1 = \frac{1}{\Delta W \sin \alpha_i + \Sigma W \sin \alpha} [\Delta W \tan \phi' (1 - \bar{B}) M_{1_i} + \Sigma (JM_1)]$$

where

$$M_1 = \frac{\sec \alpha}{1 + \frac{\tan \emptyset' \tan \alpha}{F_1}}, \text{ and } M_{1_i} = \frac{\sec \alpha_i}{1 + \frac{\tan \emptyset' \tan \alpha_i}{F_1}}$$

Hence

$$\frac{F_1}{F_o} = \frac{[\Delta W \tan\phi' (1 - \bar{B})\, M_{1_i} + \Sigma(JM_1)]\, \Sigma W \sin\alpha}{(\Delta W \sin\alpha_1 + \Sigma W \sin\alpha)\, \Sigma(JM_o)}$$

To find the position of the neutral point, put $\frac{F_1}{F_o} = 1$ and $\alpha_1 = \alpha_n$ as before.

Then $\sin\alpha_n = (1 - \bar{B})\, M_{1_n} \frac{\tan\phi'}{F_o}$

but at the neutral point $M_{1_n} = M_{o_n}$, therefore

$$\sin\alpha_n = \frac{(1 - \bar{B}) \sec\alpha_n}{1 + \frac{\tan\phi' \tan\alpha_n}{F_o}} \cdot \frac{\tan\phi'}{F_o}$$

which reduces to

$$\tan\alpha_n = (1 - \bar{B} \sec^2\alpha_n) \frac{\tan\phi'}{F_o}$$, as before /eqn (1)/.

This is a quadratic in $\tan\alpha_n$. The negative root gives high negative values of α_n, which doubtless chiefly reflect the known anomalies of both the Conventional and the Bishop Simplified Methods in cases of steeply rising slip surfaces /Whitman & Bailey, 1967; Turnbull & Hvorslev, 1967/. These negative values of α_n (ϕ'_{mob} - 90 and steeper) are not of practical importance and are therefore neglected.

Equation (1) is a general solution which applies for any value of $\bar{B}$ to positive or negative influence loads, i.e. to fills, if assumed to be of zero strength, and to cuts if the complications of changes in slide geometry and the breakdown of possible negative pore-pressures are neglected. It also holds for slip surfaces of circular or general shape and, in principle, regardless of whether these are pre-existing or potential. It would obviously be questionable, however, to apply the idea to a potential slip surface which had no physical reality. It will be noted that the position of the neutral point is independent of ΔW and c'.

Two special cases can be distinguished:

(i) for $\bar{B} = 1.0$, when

$$\tan\alpha_n = (1 - \sec^2\alpha_n) \frac{\tan\phi'}{F_o} \qquad (2)$$

which is satisfied by $\alpha_n = 0$ (3)

and (ii) for $\bar{B} = 0$, when $\tan\alpha_n = \frac{\tan\phi'}{F_o} = \tan\phi'_{mob}$ (4)

i.e. $\alpha_n = \phi'_{mob}$

In the general case of $1.0 > \bar{B} > 0$, the neutral point will occupy positions intermediate between those of cases (i) and (ii) above, in accordance with equation (1). The solution of this equation is shown graphically in Fig. 3.

While $\bar{B}$ is an undrained parameter, the case of $\bar{B} = 0$ may also conveniently be regarded as equivalent to the fully drained condition with respect to a corrective earthwork of any initial pore-water pressure response*. In principle this idea can be applied to any $\bar{B}$ value.

For circular slip surfaces, the result for case (i) confirms the self-evident fact that for $\bar{B} = 1.0$ the position of the neutral point is situated vertically below the centre of the slip circle /Fig. 4a/. In comparison, the solution for case (ii) shows that the position of

* The long-term effect of the earthworks on the original steady state pore-water pressures in the landslide as a whole is neglected.

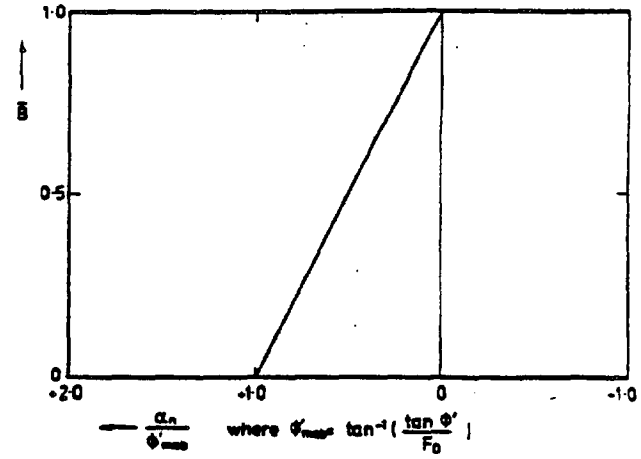

Fig. 3 : Approximate variation of α_n/ϕ'_{mob} with $\bar{B}$. The relationship is not perfectly linear, but the divergencies are insignificant within the normal range of α_n/ϕ'_{mob} values.

the neutral point for $\bar{B} = 0$ is displaced towards the slope by a horizontal distance equal to the radius of the appropriate friction circle, i.e.

$$R \frac{\sin\phi'}{F_o}$$ /Fig. 4a/

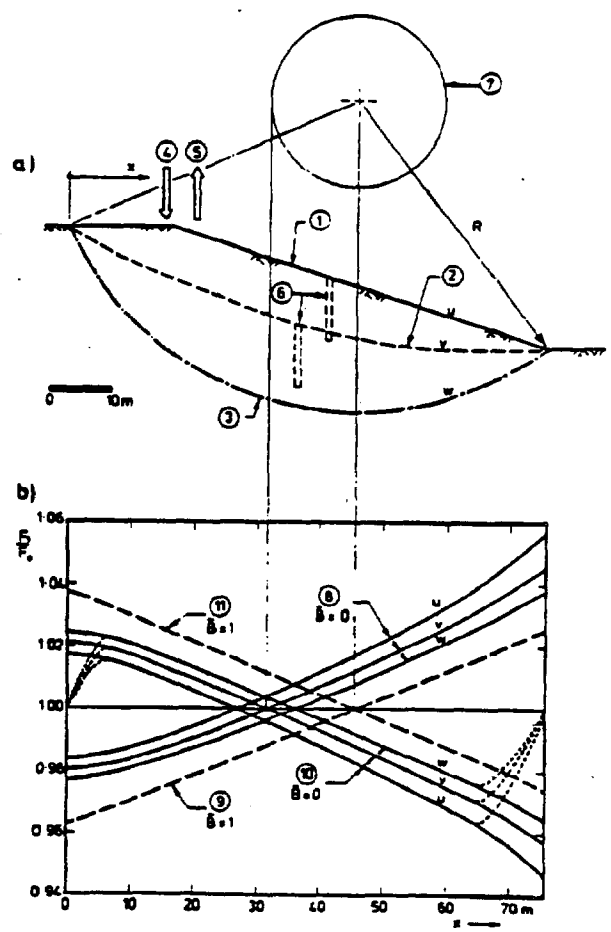

Fig. 4 a) and b)

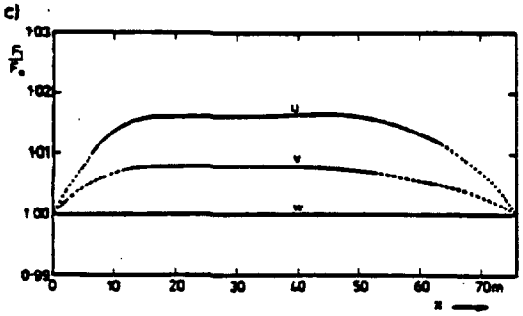

Fig. 4 : Influence lines for F_1/F_0 for a typical circular slide: –

a) Cross-section of landslide.

b) Influence lines for an influence "cut" and an influence fill for $\bar{B}$ = 1.0 and $\bar{B}$ = 0 and for various original piezometric lines.

c) Influence lines for an influence, drainage, for various original piezometric lines.

(1) Ground surface and piezometric line u ($\bar{r}_u$ = 0.49).

(2) Piezometric line v ($\bar{r}_u$ = 0.29). (3) Slip surface and piezometric line w ($\bar{r}_u$ = 0). (4) Influence fill. (5) Influence "cut". (6) Influence drainage. (7) Friction circle with radius = R sin ϕ'_{mob}. (8) Influence fill with $\bar{B}$ = 0. (9) Influence fill with $\bar{B}$ = 1.0. (10) Influence "cut" with $\bar{B}$ = 0. (11) Influence "cut" with $\bar{B}$ = 1.0.

NB. Curves (9) and (11) are independent of the original piezometric line.

In addition it is clear that for non-circular slip surfaces which include a planar section, the neutral line will widen to form a NEUTRAL ZONE should the inclination of this section to the horizontal coincide with the value of α_n for the particular conditions obtaining.

Discussion

Partly as a check on the above results for the positions of the neutral point and partly in order to define the chosen influence lines in their entirety, a number of computer analyses have been run for a constant slice width b. The effects of various influence loads acting on a typical circular slip surface have been determined using Bishop's Simplified Method /1954/ and similar investigations for a typical non-circular slip surface have been made by the Morgenstern & Price Method /1965/. In all these analyses an arbitrary influence load of 20.39 tonne f /200 kN/ on a 1 metre width /measured horizontally in a valleyward direction/ has been used in the circular cases and the same load acting on a 2 metre width in the non-circular ones. In all cases the section of landslide analysed is 1 m thick in a cross slope direction.

The complete influence lines for each case considered are given in Figs. 4a, b, 5, 6, and 7a, b. As will be seen from the plots of F_1/F_0 against α, in Figs. 5 and 6, the computations confirm the theoretical predictions for the positions of the neutral points.

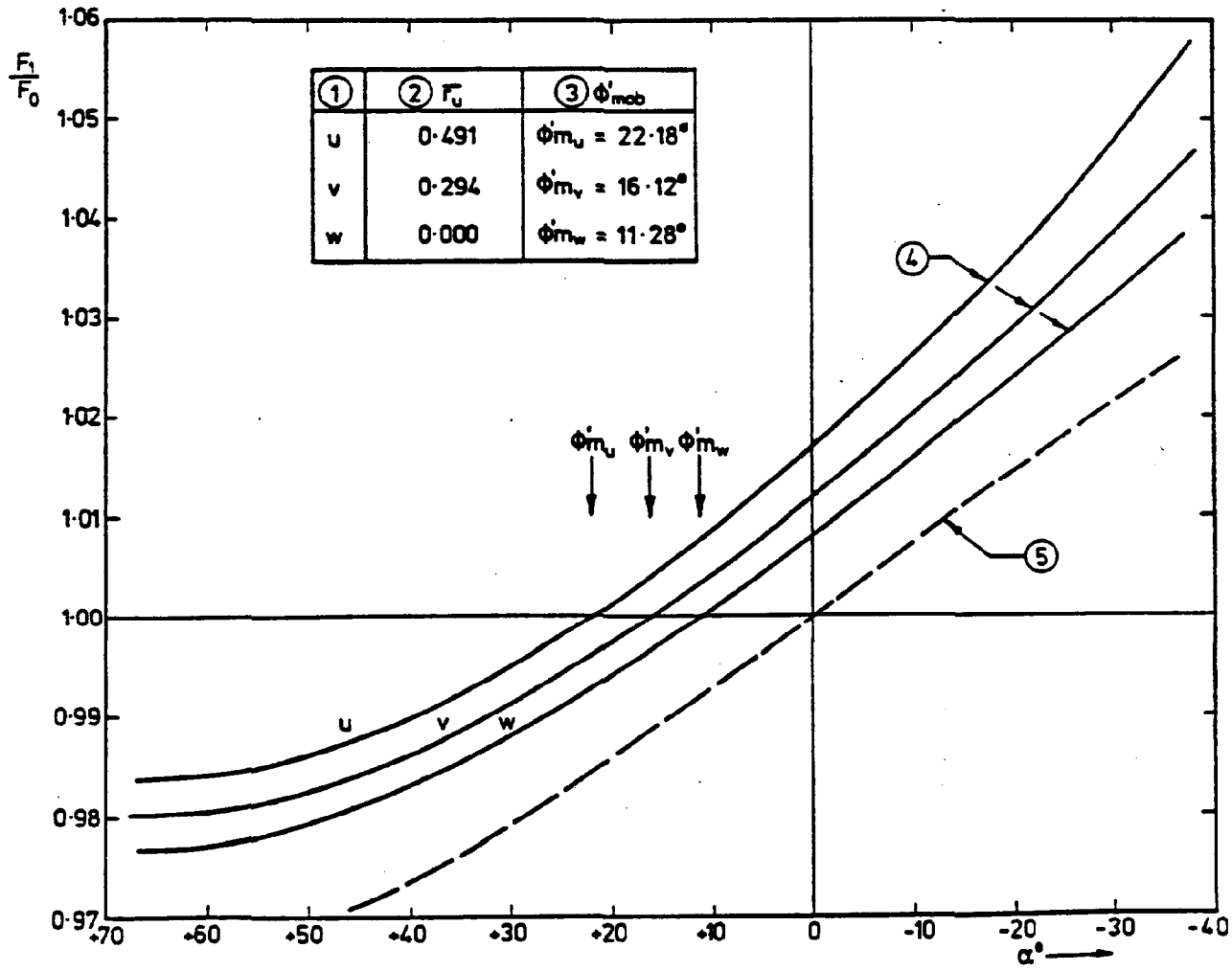

Fig. 5 : Influence lines for F_1/F_0 for a typical circular slide (as in Fig. 4), plotted against α.

(1) Original piezometric line. (2) Average pore pressure ratio. (3) Mobilised effective angle of shearing resistance. (4) Influence lines for an influence fill with $\bar{B}$ = 0 and various original piezometric levels. (5) Influence line for an influence fill with $\bar{B}$ = 1.0, which is independent of original piezometric level.

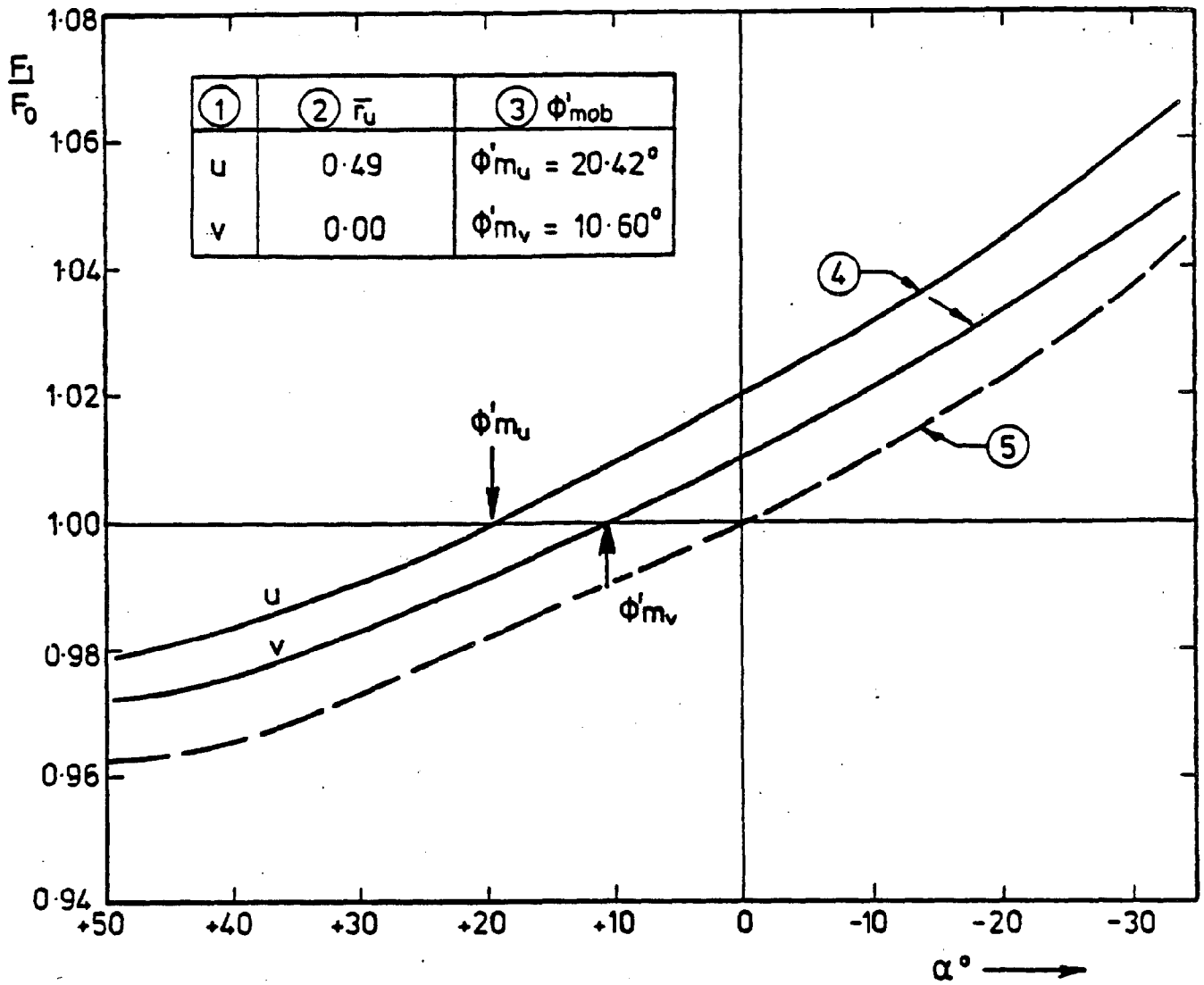

Fig. 6 : Influence lines for F_1/F_0 for a typical non-circular slide (as in Fig. 7), plotted against α. (1) to (5) are as defined for Fig. 5.

A check, for the circular case with $\bar{B} = 0$, on the sensitivity of the results to the magnitude of a positive influence load, indicates that the values of $F_1/F_0 - 1$ are proportional to this load up to a value of at least twice the maximum total vertical stress acting on the slip surface considered, that is, well beyond any practical limit. This proportionally does break down, however, if the influence load is increased greatly, for instance by a factor of 100.

A pre-requisite for application of these ideas is, of course, determination of the location of existing or likely potential slip surfaces. As this information is needed in any case, however, to permit piezometers to be installed in their proper positions, this is not seen as a disadvantage. The examples considered all comprise single slips. In practice, complex assemblages of slips are frequently encountered and then a set of neutral lines /as in Fig. 2c/ may need to be defined separately for several, or all, of the component single slips.

It follows from equation (1) that the positions of the neutral lines, for any conditions other than that represented by the special case of $\bar{B} = 1.0$, will tend to shift valleywards as the initial factor of safety, F_0, is increased towards F_1 by the stabilization works. The practical significance of this will depend partly on the shape of the slip surface and partly on the designed improvement in F_0. In principle it seems better to work as far as possible with the final value of F.

It should perhaps be emphasised that the values of $\bar{B}$ in the foregoing analysis refer strictly to the undrained change in pore-water pressure associated with the applied cut or fill, and the conclusions reached are thus independent of the „background" drainage conditions in the slip as a whole, except insofar as these determine F_0. Thus, for example, the neutral line for an influence loading with $\bar{B} = 1.0$ will be defined by $\alpha_n = 0^0$ regardless of whether the slip itself is in the short-term, intermediate or long-term condition. For the first two of these conditions, however, the continuing change in pore-water pressures in the slip itself, as these move towards equilibrium, must also be considered, in relation to its effect on both the overall long-term factor of safety and the long-term position of the neutral point.

In the past, vectors of surface movement in an active landslide have sometimes been used as a guide to the proper location of corrective earthworks, for instance by limiting the extent of a counterweight berm to the area which has shown a tendency to rise /K.R. Early, pers. comm./. On the assumption that the ground surface movements closely reflect the shape of the underlying slip surface, we now see that this method is accurate for a fully undrained fill but on the conservative side for a fully drained one.

Some engineers hold the view that, in effect, the neutral line is located vertically beneath the centre of gravity of the slip mass. From the foregoing, however, it is clear that, in general, this is not correct. In the landslides examined so far, two of which are shown in Fig. 8, the vertical through the centre of gravity of the

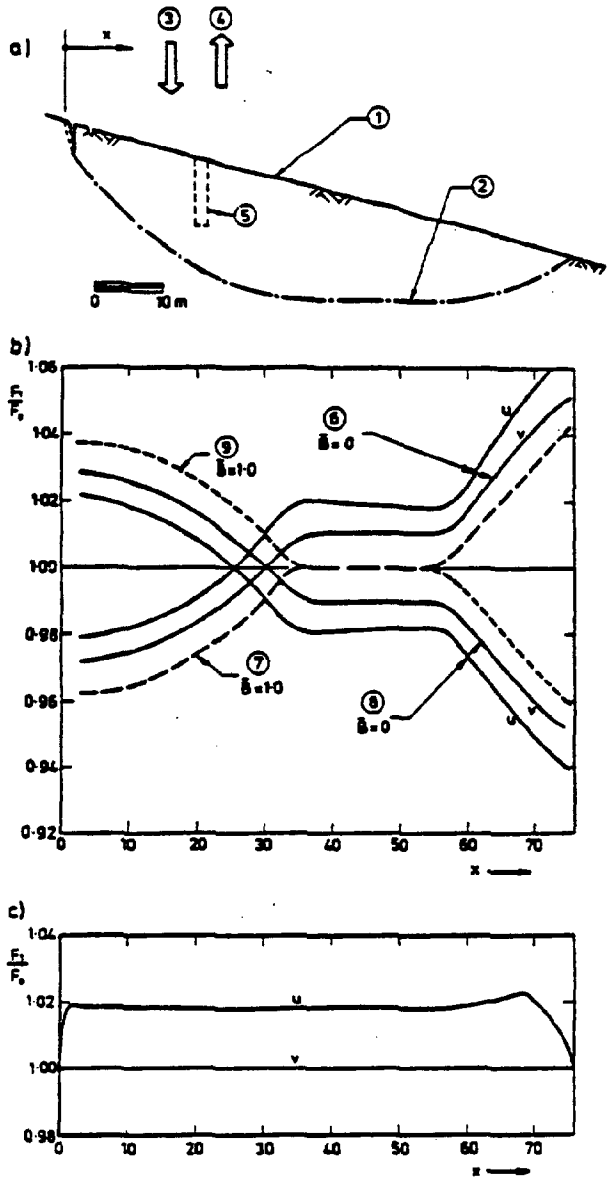

Fig. 7 : Influence lines for F_1/F_0 for a typical non-circular slide: –

a) Cross-section of landslide.

b) Influence lines for an influence "cut" and an influence fill for $\bar{B}$ = 1.0 and $\bar{B}$ = 0 and for various original piezometric lines.

c) Influence lines for an influence drainage for various original piezometric lines.

(1) Ground surface and piezometric line u ($\bar{r}_u$ = 0.49).

(2) Slip surface and piezometric line v ($\bar{r}_u$ = 0).

(3) Influence fill. (4) Influence "cut". (5) Influence drainage.

(6) Influence fill with $\bar{B}$ = 0. (7) Influence fill with $\bar{B}$ = 1.0

(8) Influence "cut" with $\bar{B}$ = 0. (9) Influence "cut" with $\bar{B}$ = 1.0

NB. Curves (7) and (9) are independent of original piezometric level.

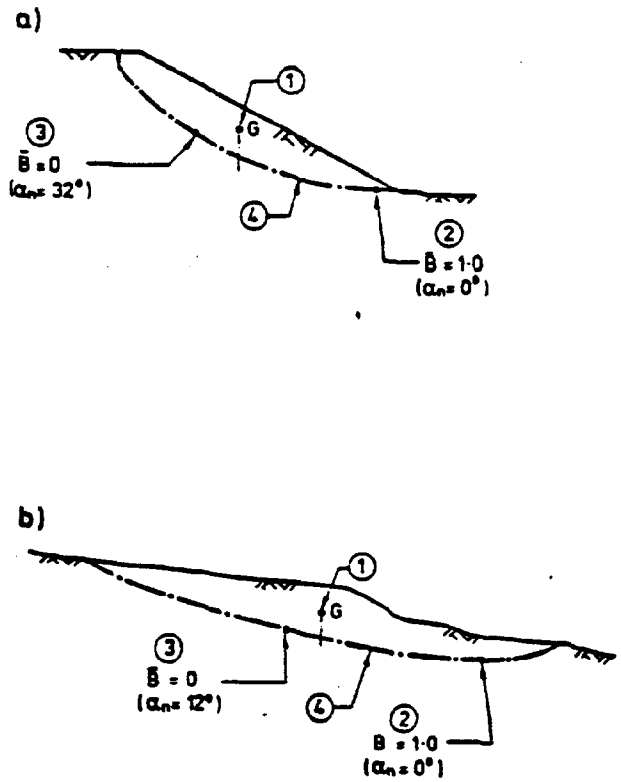

Fig. 8 : Examples of the relationship between the extreme positions of the neutral point and the centre of gravity of a slide.

a) Circular slide at Selset (after Skempton & Brown 1961)

b) Non-circular slide at Bury Hill (after Hutchinson, et al. 1973)

(1) Position of the centre of gravity. (2) Neutral point for $\bar{B}$ = 1.0. (3) Neutral point for $\bar{B}$ = 0. (4) Slip surface.

slip mass falls between the $\bar{B}$ = 1.0 and the $\bar{B}$ = 0 positions of the neutral point. This would seem to be generally the case, but may not invariably be so.

It is anticipated that the chief value of the work presented above will be in the initial stages of a design, when a knowledge of the positions of the neutral line for various values of $\bar{B}$ /e.g. Fig. 2c/, should be of help in choosing, for instance, the optimum route for a road to cross an existing landslide or the best location for corrective earthworks. The influence lines may also be used to make preliminary quantitative estimates of the F_1/F_0 ratio produced by a given earthwork. A final check on this should, however, always be made by running orthodox stability analyses.

Drainage

General remarks

The neutral line concept is clearly inapplicable in this case, as drainage of any part of a landslide is always beneficial. Influence lines for the effect of an „influence drainage", producing a reduction in piezometric pressure of 10.2 tonne f/m² /100 kN/m²/ on successive 1 m wide slices for three different piezometric lines in a typical circular slip, are given in Fig. 4c. Similar influence lines for a piezometric reduction of 10.2 tonne f/m² on successive 2 m wide slices for two different piezometric lines in a typical non-circular slip are given in Fig. 7c. From these examples we see that the effect of a given drainage is rather constant throughout, except for a slight rise at the toe. The rapid reduction in effect at both head and toe of the slides results from the neglect of negative pore-water pressures once the reduced piezometric line falls below the level of the associated part of the slip surface.

Some indication has been given earlier of the great variety of drainage measures that have been used for slope stabilization. Of these, two will be treated in more detail here.

Horizontal drains

This term refers to small diameter pipe drains that are installed within a slope, usually by helical auger or rotary drill*, on a rising gradient of typically 2% to 20% so as to discharge by gravity. While the origin of this type of drain is obscure, much of the early development work was carried out in California, where horizontal drains have since been widely used /Smith & Stafford,1957; Root,1958/. More recently, they have been employed to stabilize slopes in many other countries, including Japan /Taniguchi & Watari,1965/, Britain /Ayres,1961; Robinson,1967/, Germany /Henke,1968/, Czechoslovakia /Záruba & Mencl,1969/, Yugoslavia /Nonveiller,1970/, New Zealand /East, 1974/, Hong Kong /Tong & Maher,1975/, Canada /La Rochelle et al.,1976/ and France/Cambefort,1966; Rat,1976/.

Horizontal drains are usually between about 5 and 20 cm in diameter. In most cases they are spaced between 3 and 20 m apart and, as mentioned above, have lengths of about 30 to 100 m. They may often with advantage, be installed from several elevations. Discharges from a single drain have varied from about 175,000 litres/day /Brawner,1971/ to zero. Early installations generally consisted of perforated steel pipes without filters and were prone to both corrosion and siltation. Smith & Stafford /1957/ recommended that the 6 m length of drain nearest to the outlet should be galvanised and nonperforated, to slow down corrosion and hinder choking of the pipe by roots. More recently plastic pipes have been used, with filters formed of porous concrete /Robinson,1967/, resin bonded sand /Nonveiller,1970/ or synthetic filter fabrics. In jointed rock and residual soil masses, Choi /1974/ recommends the use of drains with impermeable inverts.

The use of horizontal drains is most appropriate in the case of slopes where the ground-water lies too deep to be reached by trench drains. Such conditions are frequently associated with relatively steep slopes and deep-seated slip surfaces /Nonveiller, 1970/. Most of the slopes treated have been between about 15° and 45° in inclination, though horizontal drains have been installed in Hong Kong in slopes of weathered igneous rocks of up to 70° inclination /Tong & Maher,1975/. From a practical point of view it is important that the rock or soil involved is readily drillable and does not cave, and it is an advantage if the necessary drain length does not exceed about 90 m /Smith & Stafford,1957/. As with any form of drainage, it is helpful if the mass to be treated contains previous layers or zones, but this is not essential.

It can be difficult to install horizontal drains in a slide that is still moving, as the drill strings may jam. Such an operation was successfully carried out, however, on an active slide on the São Paulo to Santos highway /Teixeira & Kanji,1970/. The slide had an area of about 20 hectares and was moving at between 2 and 5 m/month. Because of this high movement rate, the horizontal drains were installed in two stages. In the first a preliminary stabilization was attained by installing drains about 40 m long. It was then possible to install the second stage drains in lengths up to 120 m. After 5 years the slide had shown no significant further movement.

Until recently, horizontal drains have been installed entirely on an empirical basis, with the quantity of water discharged as the main criterion of success. Latterly both Nonveiller /1970/ and Kenney et al. /1976/ have criticized this approach and re-emphasised that the primary aim of such drainage is to reduce pore-water pressures which, in clay slopes, may be achieved with a very small yield of water. Both Teixeira & Kanji /1970/ and, to a more detailed extent, Nonveiller /1970/ make use of flow nets to estimate the reduction in pore-pressure that a given horizontal drain installation will achieve. A very thorough theoretical study of the stabilizing effects of horizontal drains has more recently been made by Choi /1974/.

Kenney et al. /1976/ make a three-dimensional model study of the drainage of homogeneous 3:1 slopes by horizontal drains, and produce design charts which are believed to apply with reasonable accuracy to homogeneous slopes with inclinations of between 2.5 and 3.5:1. Two depths to an impervious lower boundary are considered. As the authors state, the design charts have yet to be calibrated against field experience.

As indicated above, monitoring of horizontal drain systems has generally been confined to measurement of drain discharge. In some cases the effect of drainage on the movements of the slide being treated have also been reported /Teixeira & Kanji,1970/. The effects of horizontal drainage installations on ground-water pressures have, as yet, been measured rather rarely. A brief report is given by Brawner /1971/ of reductions of between 9 and 12 m in cleft-water pressures in a 137 m high rock slope, occurring within 30 days of installing four trial horizontal drains. A fuller description of the stabilization by horizontal drains of slides in a 15 m high, 3:1 cut slope of silts and sands in New Zealand is provided by East /1974/. Fifty-five drains of 30 m nominal length and 3 m spacing, in three rows, were installed in the space of ten days during the winter of 1972. Within a further 5 days, piezometric levels had dropped by between 1.0 and 2.5 m /1.7 m on average/. A check in the winter of 1974 showed that the average depression of piezometric levels was then 2.0 m. No further movements of the slides were recorded in the two years following installation of the drains. It is now clear that this installation was over-designed. It was, however, an emergency operation to save a high-tension electricity pylon threatened by the slides and as such was both expeditous and successful. Various divergencies from the idealized slopes explored by Kenney et al. /1976/ prevent this case record from serving as a check on their design charts.

There is a great need for case records of well instrumented and monitored horizontal drain installations in various soils and rocks.

Trench and counterfort drains

General remarks

As indicated above, the term counterfort is used here to describe drains which penetrate into solid ground beneath a slip surface, and therefore also provide some mechanical buttressing to the slope, while the term trench drains is reserved for those which do not thus penetrate, and so contribute to stability only through their drainage action.

The counterfort drain seems to have been the first of these types to be used as a principal stabilization measure. While the origins have not been explored, it is clear that drains of this type were being widely used in France and England during the first half of the 19th century, in both embankments and cuttings /Gregory, 1844; Collin,1846/. Collin, in particular, developed his designs to a considerable degree of sophistication, arranging, for example, the width of the counterforts to increase stepwise down-slope so as to improve the stability of the clay mass lying between them. To the same end, in remedying a landslide, the soil between the counterforts was often excavated successively and then, if sufficiently dry, replaced and compacted in thin layers /Collin,1846 p.71/. In contemporary English practice /R. Stephenson reported by Dockray,1844; Gregory,1844/ this operation was omitted, as indeed it is nowadays.

At that time it seems to have been generally believed that drains that did not penetrate beneath the seat of sliding were of little or no use /e.g. Whitley, 1880/. The basis for such a view was removed by Terzaghi's enunciation of the principle of effective stress in 1925, but it took about a further three decades before trench drains took their proper place as a stabilization measure in the U.K.

Approximate theory

Up to now, the design of trench drains for slope stabilization in the U.K. has proceeded on a semi-empirical basis. Typically, the average lowering of piezometer level on the slip surface required to produce the desired increase in factor of safety has been calculated: the trench drains needed to effect this average lowering have then generally been dimensioned on the basis of experience.

* A case where horizontal drains were installed by hydraulic jacking is described by La Rochelle et al. /1976/.

There is an extensive literature on ground-water flow to drains, especially in the fields of soil physics and agricultural engineering /reviewed, for example, by van Schilfgaarde 1970, 1974, van Horn 1974/. This is largely concerned, however, with the prevention of water-logging of crop roots and thus with the determination of the phreatic surface between horizontal drains of relatively shallow depth /often 1 to 1.5 m/. Drainage for slope stabilization, on the other hand, requires a knowledge of the piezometric levels at depths of typically up to 8 or 10 m. The problem has therefore been approached through the use of flow nets, as was suggested by Henkel /1957/.

Even in the long-term, the actual three-dimensional trench drain problem, with intermittent recharge from infiltration, a variable inflow of ground-water from upslope, and non-homogeneous and isotropic permeability, varying with effective stress, involves non-steady saturated and partially saturated flow, and is highly complex*. Furthermore, the stress release occasioned by the excavation of the drains generally produces a significant short-term modification of the original pore-water pressures, which is followed by an intermediate stage of consolidation and possibly swelling, before the long-term condition is reached. The long-term condition is of chief interest in the context of slope stabilization, however, and the approximate treatment of this, described below, has therefore been developed.

The initial assumptions are that both the ground surface and the original piezometric surface are horizontal, that the permeability of the ground is homogenous and isotropic and that the trench drains are of rectangular cross-section, and parallel to each other. The effects of anisotropic permeability are explored subsequently. This arrangement and definitions of the various symbols used are shown in the key cross-section of Fig. 9. The drains are also assumed to be of great length L upslope compared with their spacing S, so that a two-dimensional approach will have some validity. A photograph of such drains being excavated /for which B = 0.6 m, D = 5 to 6 m and A = 11 to 12 m/ is shown in Fig. 10.

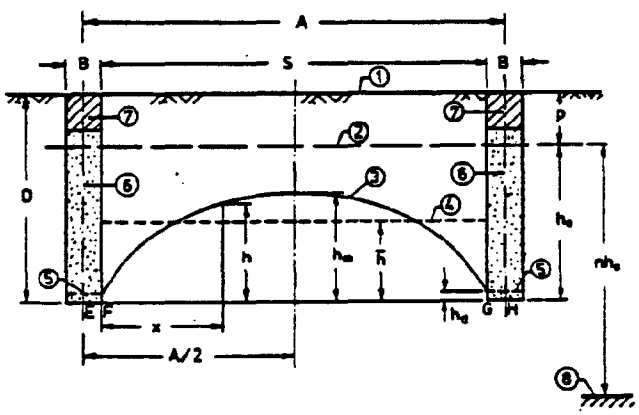

Fig. 9 : Key diagram: cross-section of typical trench drains.
(1) Ground surface. (2) Original piezometric level on plane EH. (3) Piezometric levels on plane FG after drainage. (4) Mean piezometric level on plane FG after drainage. (5) Mean piezometric level on drainage inverts after drainage. (6) Trench or counterfort drain. (7) Clay seal. (8) Impermeable boundary at depth.

Flow nets, derived from finite element analyses by E.N. Bromhead, have been drawn for an S/D ratio of 2, for two depths to an impermeable layer /defined by depth ratios, n, of 1.0 and 4.5**/ and for assumed ponding of water at ground level, i.e. h_o = D /Figs. 9 and 11/. From these, the piezometric levels on planes at any depth can readily be determined. For simplicity, however, attention is concentrated on the plane EH /Fig. 9/ at drain invert level. Piezometric surfaces, with respect to this plane, are plotted for the two depth ratios and various values of S/D in Fig. 12, on the assumption that

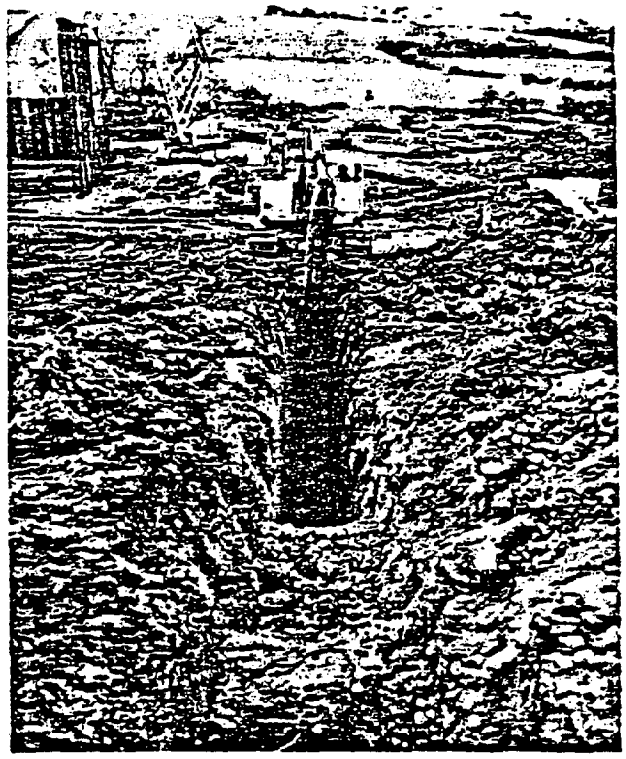

Fig. 10 : Photograph of trench drain being dug in a till slope at Low Worsall, Yorkshire, April – May 1977 (with acknowledgements to the Northumbrian Water Authority).

the permeability ratio $R_k = \frac{k_h}{k_v}$ is 1.0. For any given S/D ratio, the same plots, of course, also yield the piezometric surfaces for varying values of R_k through scale transformation.

It is now assumed that, in effect, a horizontal ponded surface exists at some depth p = D - h_o below ground level. This approximation, which is probably not unreasonable for clay soils in temperate climates, particularly as k often decreases rapidly with depth, enables the approach to be made more general by substituting h_o for D in Fig. 12. The approximation is, of course, also implicit in the theoretical curves in Figs. 13, 20 and 21.

From Fig. 9, the following definitions and relationships can be drawn with respect to plane EFGH after long-term drainage:

/i/ The average piezometric head, $\bar{h}$, on the plane FG between drains can be expressed as = $f_s\, h_m$, where f_s is a factor reflecting the shape of the relevant piezometric surface /3 in Fig. 9/ and h_m is the piezometric head mid-way between drains.

/ii/ The average piezometric head, h_{av}, on the whole plane EH, is given by $h_{av} = \frac{h_d B + \bar{h} S}{A}$

where h_d is the piezometric head at the drain inverts. In general, in the rest of the paper, h_d is assumed to be zero, when

$$h_{av} = \frac{\bar{h} S}{A}.$$

The expressions under /i/ and /ii/ above apply to horizontal ground. For ground of inclination β, with trench drains of high L/S ratio,

* In addition, the solutions are generally a function of the parameter q/k, the ratio of the infiltration and the permeability, which is not readily determined very closely.

**Increase of n above this value appears to have little effect on the flow net within the drain depth.

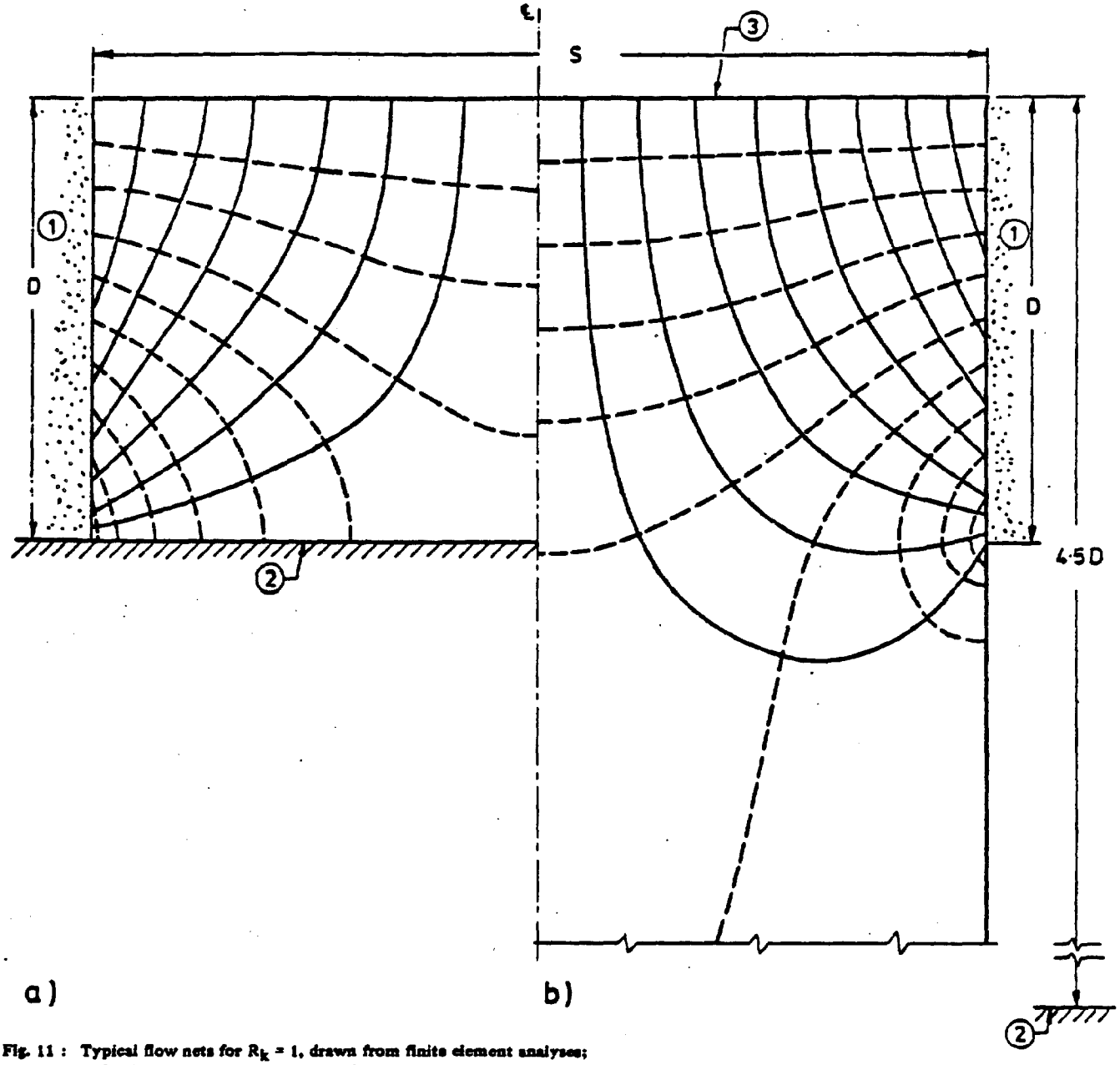

Fig. 11 : Typical flow nets for $R_k = 1$, drawn from finite element analyses;
a) for fully penetrating drain (n = 1)
b) for partially penetrating drain with n = 4.5.
(1) Trench drain. (2) Impermeable lower boundary. (3) Ponded upper boundary.

constructed down the line of steepest slope, the modified values of piezometric head will be given approximately by $h_o' = h_o \cos^2\beta$, $\bar{h}' = \bar{h} \cos^2\beta$, $h'_{av} = h_{av} \cos^2\beta$, etc.

The data on Fig. 12 have been used to show how the ratios h_m/h_o and h/h_o vary with S/h_o, for n values of 1.0 and 4.5 and $R_k = 1.0$ /Fig. 13/.

As $\frac{\bar{h}'}{h_o'} = \frac{\bar{h}}{h_o}$ and $\frac{h_m'}{h_o'} = \frac{h_m}{h_o}$,

this plot is valid for $\beta \geq 0$.

The efficiency of trench drains on a given cross-section is defined, with respect to the intervening mass of soil, as

$$\bar{\eta} = \frac{h'_o - \bar{h}'}{h'_o} = \frac{h_o - \bar{h}}{h_o}$$

while the overall efficiency of the drains, on any given cross-section, is

$$\eta_{av} = \frac{h'_o - h'_{av}}{h'_o} = \frac{h_o - h_{av}}{h_o}.$$

Plots of $\bar{\eta}$ or η_{av} against S/ho can readily be made from the curves in Fig. 13, as shown later for $\bar{\eta}$. It will be noted that both $\bar{\eta}$ and η_{av} are independent of β.

Although, for convenience, the ensuing discussion is carried mainly in terms of $\bar{\eta}$ it should be borne in mind that the stabilizing effect of the actual trench drain installation will be a function of the true overall efficiency of the drains, which will depend on the variation of η_{av} over the site.

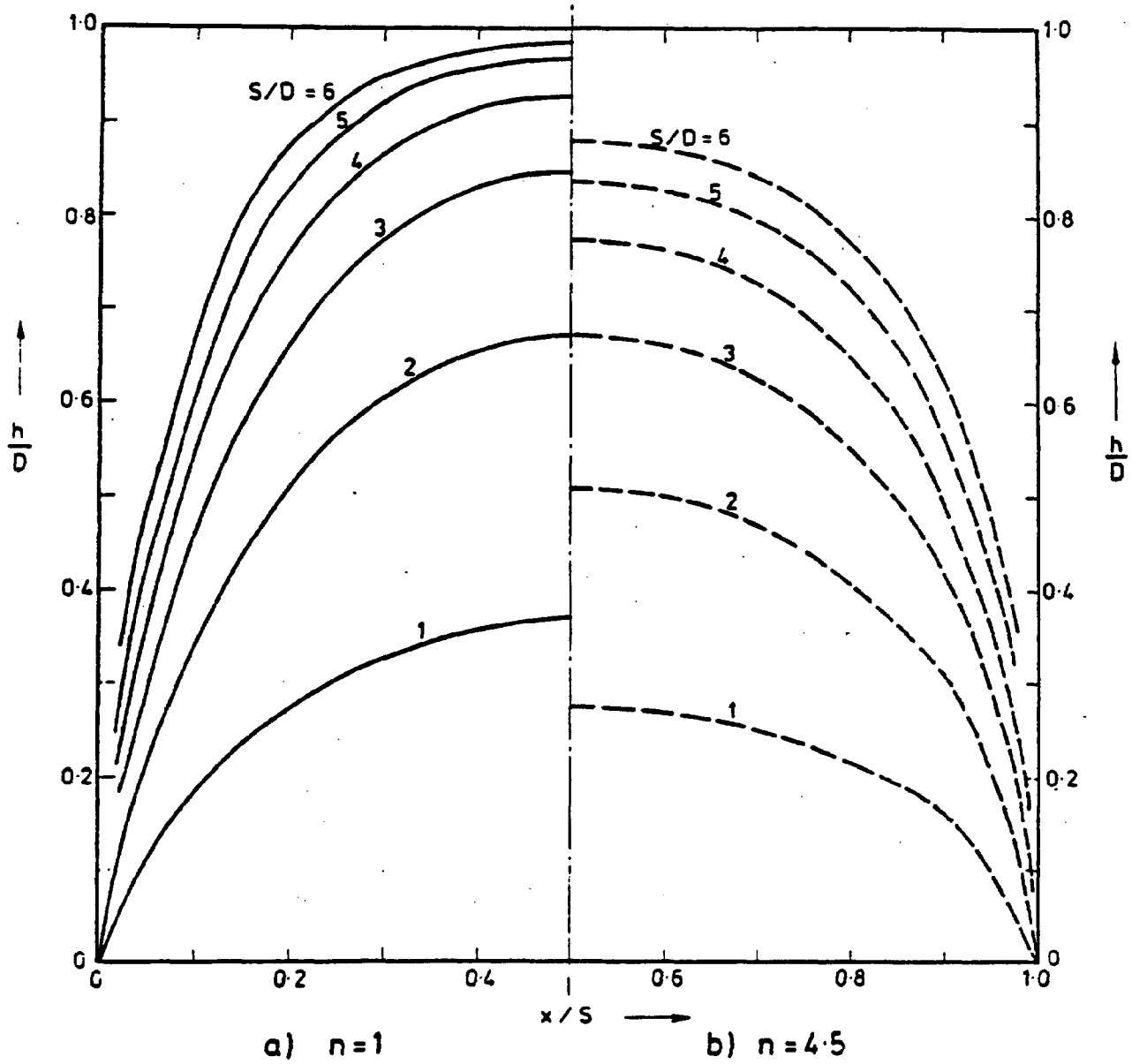

Fig. 12 : Curves showing the variation of piezometric level (at drain invert level and assuming $h_d = 0$) between trench drains, for $R_k = 1$ and various values of S/D.
a) For fully penetrating drains (n = 1)
b) For partially penetrating drains (n = 4.5)
Note. The ratios S/D and h/D are also taken to be approximately equivalent to S/h_o and h/h_o respectively. The effect of $R_k \neq 1.0$ can also be obtained from these curves by the appropriate scale transformation.

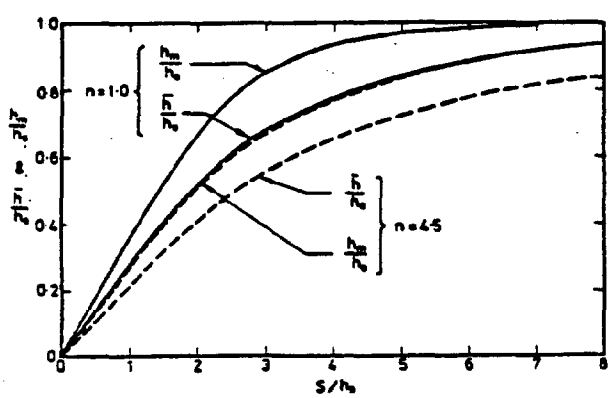

Fig. 13 : Curves showing the relationship between h_m/h_o and S/h_o, and between $\bar{h}/h_o$ and S/h_o, for fully penetrating drains (with n = 1.0) and partially penetrating drains, with n = 4.5. R_k is taken as 1.
NB. The note appended to the caption for Fig. 12 also applies here.

Case records

Details of the performance of a number of trench and counterfort drain installations are given in Table 1. Only natural slopes have

Site Ref.No.	Site Name	Approx. slope	Principal material	Drain details B	D	S	h_o	S/h_o	Drain performance h_m	$\bar{h}$	h_{av}	h_m/h_o	$\bar{\eta}$	η_{av}	T years	Source
1	Bredon Hill /Ur. Slip/	14°	Ur. Lias	.8	3.0	11.3	≤.2.6	4.35	.90	.72*	.67*	.35	.72*	.74*	1.2	Skempton and Henkel /1958/
2	Sevenoaks /Lobe D/	7°	Lr. Greensand over Wealden	.9	4.6	17.4	3.1	5.61	1.60	.95	.90	.52	.69	.71	2.2	Weeks /1969/
3	Guildford /P402-4/	7°	London Clay	.8	5.0	15.3	3.97	3.85	2.36	1.86	1.77	.59	.53	.55	10.5	Largely Simons /1977/
4	Hodson /E1-2/	5°	Gault clay	.6	3.7	8.5	3.55	2.39	≤.2.2	≤.1.62	1.51	.62	.54	.57	1.5	Skempton /1972/
5	Hodson /E3-4/	5°	Gault clay	.6	3.7	8.5	3.55	2.39	≤.1.5	≤.1.12	1.05	.42	.68	.70	1.5	" "
6	Burderop Wood /J6-9/	6°	Gault clay	.6	3.7	11.6	3.32	3.49	2.28	1.56	1.48	.69	.53	.55	1.6	Skempton /1972/
7	Burderop Wood /K9-14/	6°	Gault clay	.6	3.7	25.0	2.90	8.86	≤.2.35	1.93	1.88	.81	.33	.35	1.6	" "
8	Boulby /N2-3/	14°	Till	.5	5.2	11.0	4.86	2.26	2.52	2.02*	1.93*	.52	.58*	.60*	5.8	Cleveland Potash Ltd
9	Boulby /T2/	15°	Till	.5	5.5	6.0	2.9	2.07	1.0	.80*	.74*	.34	.72*	.74*	5.9	and Author's files
10	Barnsdale /D7-9/	11°	Ur. Lias	.7	3.5	11.3	2.77	4.08	1.35	.88	.83	.49	.68	.70	0.7	Chandler /in press/
11	Barnsdale /D22-24/	7°	Ur. Lias	.7	5.0	11.3	3.43	3.29	3.0	2.41	2.27	.87	.30	.34	0.4	" "

Notes. All dimensions in metres.

* = estimated values, using an f_s value of 0.8.

TABLE 1. Details of the performance of some trench and counterfort drains in natural slopes.

been included because, as Vaughan & Walbanke /1973/ have demonstrated for the London Clay, pore-pressures in cuts in overconsolidated clays can be strongly depressed by the associated unloading for many years after the completion of excavation. Indeed, the installation of trench drains in such a cut might well be counter-productive initially, in accelerating the equilibration of pore-water pressures although, as the long-term condition is approached, they should, if sufficiently deep, hold the maximum piezometric levels reached to lower values than would otherwise have been the case. All the examples in Table 1. involve overconsolidated clays, or colluvium derived largely from these, and have piezometers with their tips at or near to the plane of the drain inverts.

One of the earliest well-documented descriptions of a counterfort or trench drain installation is that at Sevenoaks, Kent /Weeks, 1969, 1970, Symons & Booth,1971/. A downslope section of the site, showing the extent of a trial drainage installation, is shown in Fig. 14a. The effect of the installation, on a section mid-way between the drains, is shown in Fig. 14b. An example of the reasonably long-term piezometric levels reached on a cross-section between these drains is given in Fig. 15. The material drained at Sevenoaks contains much coarse chert debris from the Hythe Beds and is probably the most permeable of all those listed in Table 1. Weeks /1969/ reports k values for the solifluctated lobe and sheet materials of about 4×10^{-6} cm/sec., measured in constant head tests on piezometers. On the other hand, the flow of groundwater from upslope is probably also greatest at this site where, directly to the north, a large area is occupied by the unconfined aquifer of the Hythe Beds /Fig. 14a/.

Fig. 14b is of interest in showing how the efficiency of drains can vary significantly up and down the slope, and how misleading it could be to rely upon one monitored cross-section. In addition it should be noted that the effect of the drains is not fully felt until a point about 3.5 times the centreline drain spacing, A, below their head. From this point /V/ the average effect of the drains tends to increase to a point W, about 0.5 A before the lower end of the drains is reached, from where the effect rapidly dies out to zero at a distance of 0.3 A past the end of the drains. These values will be particular to this site: the trend of these measurements is of general interest, however, and indicates that drains should be carried somewhat beyond the area needing to be stabilized, particularly in the uphill direction. An alternative, which may be equally effective at the head of the unstable area, would be to extend the drains less, but to provide them with „Y" or „T" shaped extensions in plan, to act as interceptors.

Examples of other monitored cross-sections between trench drains are given in Fig. 16 and 17. Fig. 16 refers to a drainage installation used, in conjunction with other measures, to stabilize a landslide which occurred during the construction of the M4 motorway at Burderop Wood, near Swindon, Wiltshire /Skempton 1972, and forthcoming paper in Geotechnique by A.W. Skempton and J.G.F. Dawson/.

The lowering of the piezometric line, for drain invert level, achieved in the first 1.6 years after completion of the drains is shown. In this case the material drained consists largely of a colluvium consisting of small lumps of Gault clay and fragments of Greensand in a matrix of completely remoulded Gault. Fig. 17 shows comparable data for the trench drain installation at Stag Hill, Guildford, Surrey /largely after Simons,1977/. This is of special interest being, at 10.5 years after drain installation, the longest record available. In this case the drained material is colluvium consisting partly of little-disturbed brown London Clay and partly of similar material that has been much disintegrated to form a 'mudslide fabric. During trench excavation there was much overbreak where the disintegrated material predominated but little or none otherwise. The locations of the trench sides is therefore uncertain* and they are shown with a broken line in Fig. 17. There is also, as indicated, a degree of uncertainty as to the position of the set of piezometers relative to the flanking drains. Constant head permeability tests on piezometers from 1.5 to 12.5 m deep at this site, carried out by the author in December 1965 and January 1966, indicate a permeability which reduces linearly with depth, on a $\log_k$ - depth plot, from about 10^{-7} m/sec at ground level to 5×10^{-10} m/sec at a depth of 6 m.

* This could apply, of course, on many other sites too. Tills tend to stand well, however, /see Fig. 10/ except where there are major inclusions of cohesionless material.

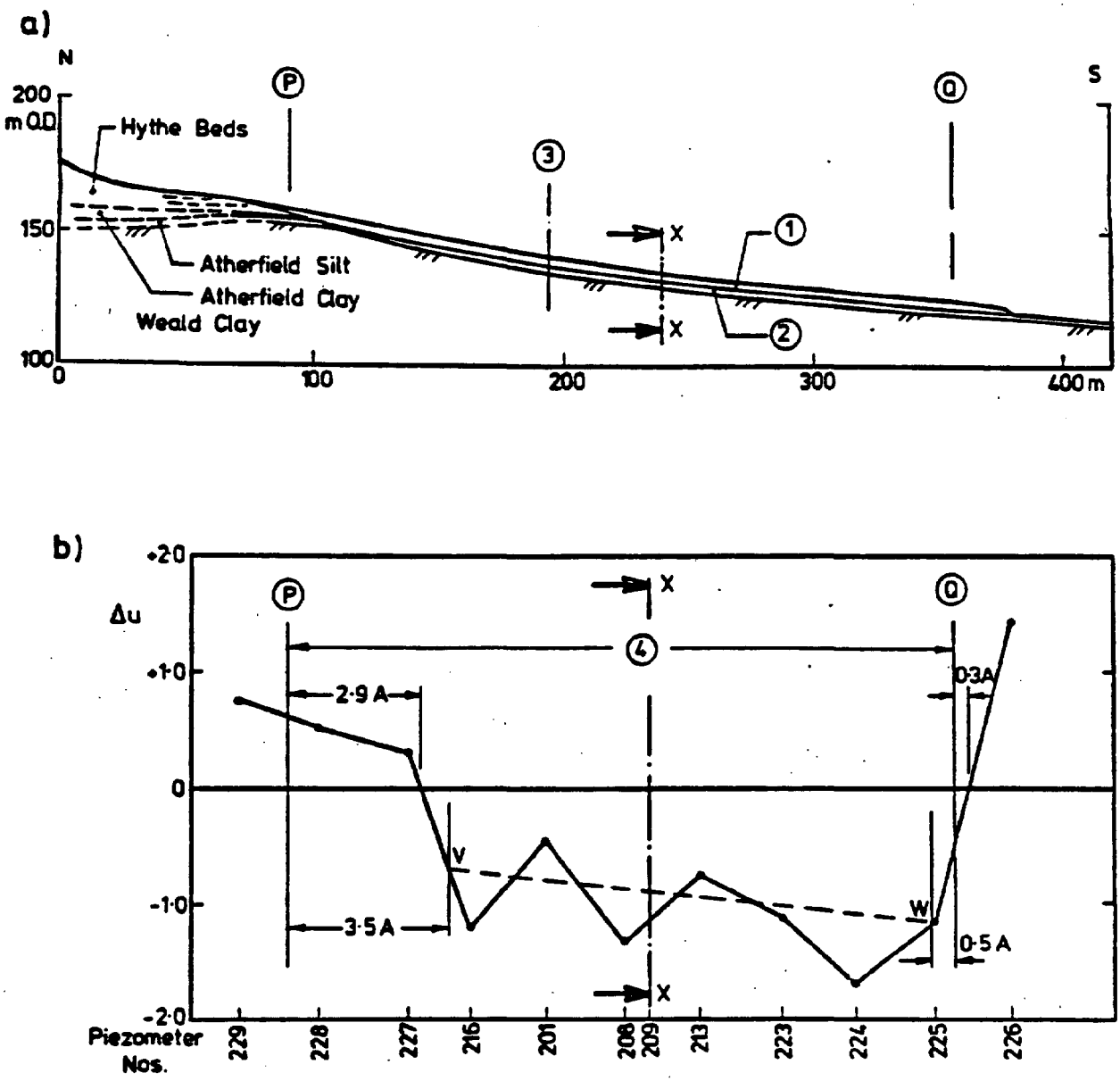

Fig. 14 : Counterfort drain installation at Sevenoaks, Kent (after Weeks, 1969, 1970, & Symons & Booth, 1971):

a) Longitudinal section.

b) Change in piezometric level, Δ u, at 4.9 m depth on centreline between drains as a result of the drainage (measured c. 1 month after installation).

(1) Upper solifuction lobe. (2) Lower solifluction sheet. (3) Centreline of proposed road, later rerouted. (4) Extent of counterforts (L ≈ 14.5A), 9.1 m to each side of the piezometer line.

In contrast to Sevenoaks, this site is on the flank of an isolated knoll, with probably a relatively small inflow of ground-water from upslope.

A long-term record for piezometer P404 at Guildford, kindly provided by Prof. N.E. Simons /1977/, is compared with the pre-drainage piezometric levels briefly recorded by a nearby piezometer /P103/ in Fig. 18. Unfortunately the original piezometer was destroyed during drain construction and not replaced for some time, so there is no record of the immediate drawdown produced at P103, nor of the behaviour in the succeeding 3 years. The long-term readings from March 1969 onwards to the present are reassuringly steady however.

A shorter, but more continuous record is provided by a drainage installation in a slope of till, with some sand and laminated clay layers, at Boulby, Yorkshire. This is given in Fig. 19, which is based upon data kindly provided by Cleveland Potash Ltd. Again the period for which the pore-pressures were monitored before installation of the drains is shorter than desirable, but the very rapid initial drawdown, diminishing as the depth of piezometer tips below trench invert level increases, is well shown for all three piezometers. Of great interest is the somewhat disturbing fact that during the first winter after installation of the drains, the piezometric levels rose strongly, almost to their pre-drainage values. This is particularly striking at piezometer N3*, where the pre-drainage artesian piezometric level of 1.68 m above original ground level was brought down to at least 1.3 m below this ground level in the September following

* A layer of laminated soils and clays was noted in the borehole for N3, in the vicinity of the piezometer tip. Dr P.R. Vaughan suggests that on cutting the drain trench through this layer the silt layers would wash out, allowing the clay laminae to fold or slump down, thus effectively sealing off the more permeable laminae.

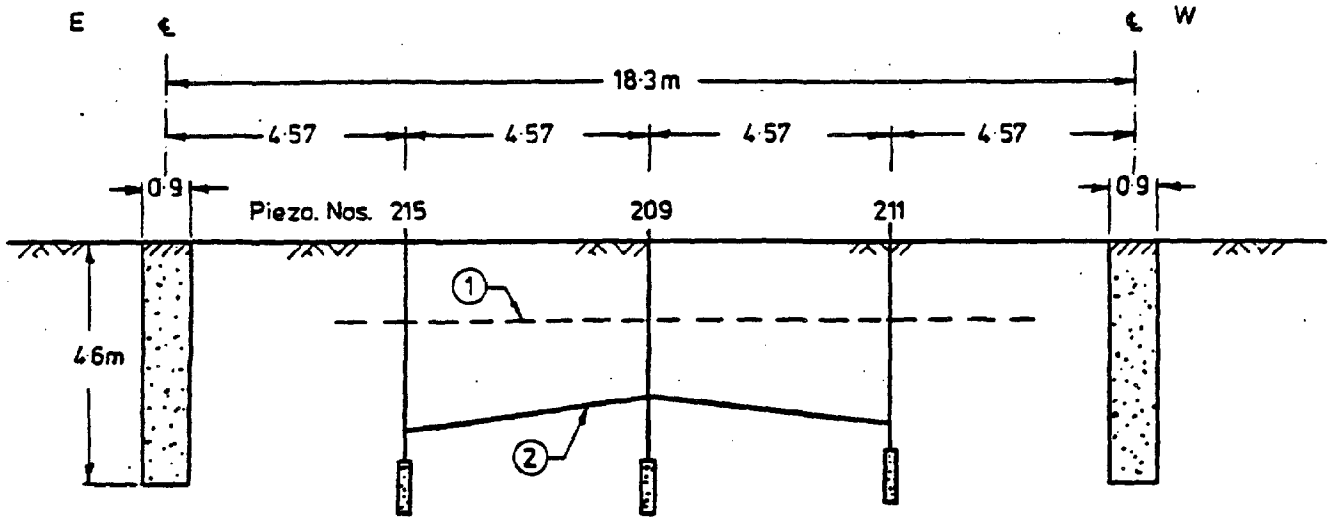

Fig. 15 : Cross-section x — x of counterfort drain installation at Sevenoaks, Kent, showing the effect of drainage (after Weeks, 1969, 1970).
Note. In this paper all such cross-sections are drawn looking downslope. (1) Approximate piezometric level before drainage. (2) Piezometric levels after drainage.

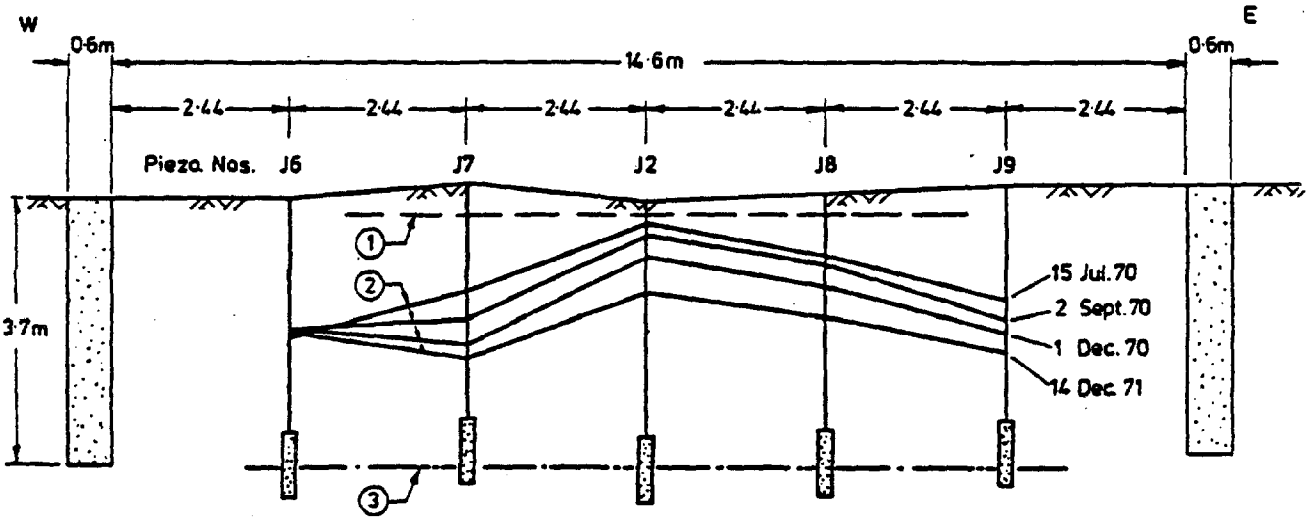

Fig. 16 : Cross-section of trench drain installation at Burderop Wood, Wiltshire, showing the effects of drainage at various times after installation (after Skempton, 1972).
(1) Approximate original position of the piezometric surface. (2) Positions of the piezometric surface following drainage (the drains were constructed between 1 and 3 July 1970). (3) Approximate position of the slip surface.

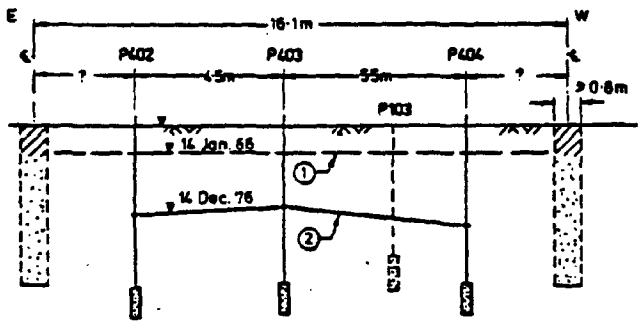

Fig. 17 : Cross-section of trench drain installation at Guildford, Surrey, showing the long-term effect of drainage (largely after Simons, 1977). (1) Approximate piezometric level before drainage, based on piezometer P103. (2) Position of the piezometric surface about 10.5 years after installation of the drains.

construction of the drains in July 1971, only to return to an artesian pressure of + 1.37 above the same datum in the following winter of 1971-72 /i.e. 90% of the September draw-down was temporarily lost/. By the next winter of 1972-73, however, the drains seem to have taken hold, and this situation has been satisfactorily maintained up to the present.

Although data are sparse, there are indications from other sites that this strong rise in piezometric levels during the first winter after drain installation may be a fairly general phenomenon. Some lesser, but significant, seasonal rise may even occur in the second winter after installation, but after that the present evidence suggests that seasonal rise is strongly damped by the presence of the drains and that around the year reduction in piezometric level is achieved. Whether this can be regarded as permanent is of course questionable, as discussed subsequently. An important lesson to be drawn from this delayed effect of drains is that some additional corrective measure, such as a toe fill, may be required to ensure stability, not only during the period of initial drawdown and consolidation but also during the first one, or possibly two, winters.

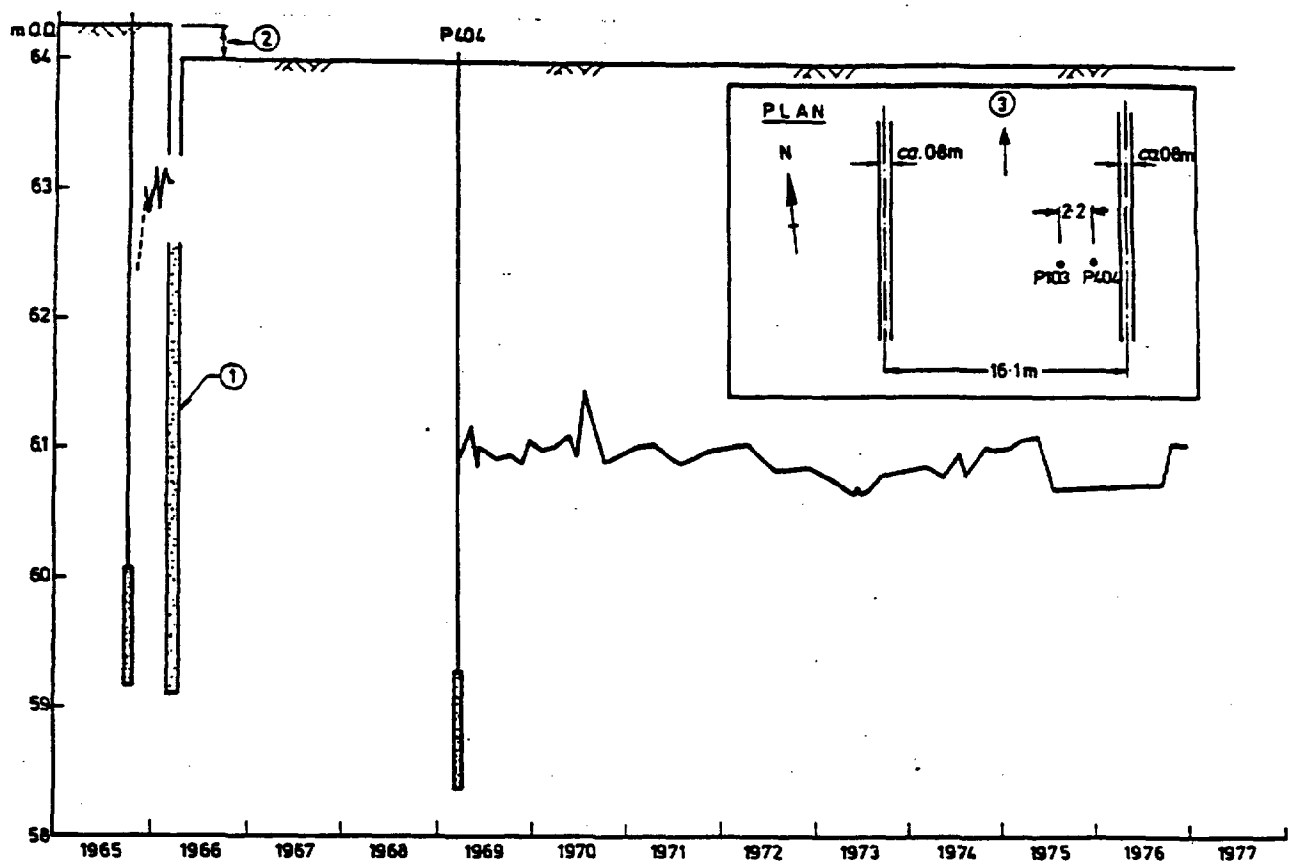

Fig. 18 : Long-term comparison of piezometric levels before and after drainage at Guildford, Surrey (largely after Simons,1977). (1) Trench drain. (2) Small lowering of ground level during construction of drains. (3) Downslope.

Henkel /1957/ remarks that the rate of drop in pore-water pressures following trench or counterfort drain construction is much more rapid than would be expected from a calculation based upon the coefficient of consolidation obtained from oedometer tests. More recently Chandler /in press/ has monitored this process for a trench drain installation in the Upper Lias, and concludes that the observed rate is at least 4 times as fast as that occurring in one-dimensional consolidation in the field, predominantly through stress relief effects.

Dr. M. Hamza, of Imperial College, is currently examining the immediate, undrained pore-pressure changes that are caused by the stress release consequent upon excavating drain trenches. Using a non-linear finite element programme, he finds, for trenches excavated in saturated, overconsolidated clay, with S = 15 m, D = 5 m, K_o = 1.0, B = 1.0 and h_o = 4.5 m, that the average immediate reduction in h_o, for the central three-quarters of the mass between the drains, is about 1.0 m for a = 0, and 1.5 m for a = -0,12* /a is as defined by Henkel 1960/. This stress release effect is clearly an important component of the rapid drawdowns observed soon after drain installation /e.g. Fig. 19/: given favourable boundary conditions, a further component will come from the following consolidation stage.

Comparison of theory with field behaviour

From the approximate theory developed earlier, the families of curves in Figs. 20 and 21 are readily derived. These can be compared with the field data summarised in Table 1.

The aim of Fig. 20 is to determine values of the shape factor f_s, for the piezometric levels between drains. Thus h/h_m is plotted against x/S for a typical drain installation with S/h_o = 3, for n values of 1.0 and 4.5 and R_k values of 1 and 5. As can be seen, the various theoretical curves do not differ greatly.

Against this background are plotted the available field observations. All these are from natural slopes, except those from the cutting at Cumnor Hill. In general there is an appreciable scatter, with the field observations falling on or below the theoretical curves. The theoretical values of f_s, for the curves shown, range from 0.76 to 0.80. It is suggested that in practical cases where only the mid-point piezometric height, h_m, is known, an estimate of the value of $\bar{h}$ can be made by taking this as = $f_s\, h_m$, with f_s = 0.8. This approximation is probably slightly conservative.

In Fig. 21a, theoretical curves for the relationship between h_m/h_o and S/h_o are shown for n values of 1.0 and 4.5 and R_k values of 1 and 5. With two exceptions /Bredon Hill and Sevenoaks/ these bracket the available field data. Finally, in Fig. 21b, theoretical curves for the variation of long-term drain efficiency $\bar{\eta}$ are given, for similar values of n and R_k. A comparison of the available field data with these curves leads to the following conclusions:

/i/ With the exception of point 11 for Barnsdale, which is rather short-term and whose efficiency is probably still increasing, none of the field points lies below the curve for n = 4.5 and R_k = 1 /curve G/.

/ii/ Up to an S/h_o ratio of 5, the bulk of the field data lies between curve G and the curve for n = 1.0 R_k = 5**/curve H/. If site average are considered, all the data, with the exception of point 1 for Bredon Hill, fall between curves G and H and lie generally in the upper half of that space.

* Equivalent to a value of the pore-pressure parameter A of + 0.16.

**No relevant measurements of the ratio R_k are available, but 5 has been chosen as a likely upper limit for the materials involved. Mitchell /1956/ provided some guidance for this choice.

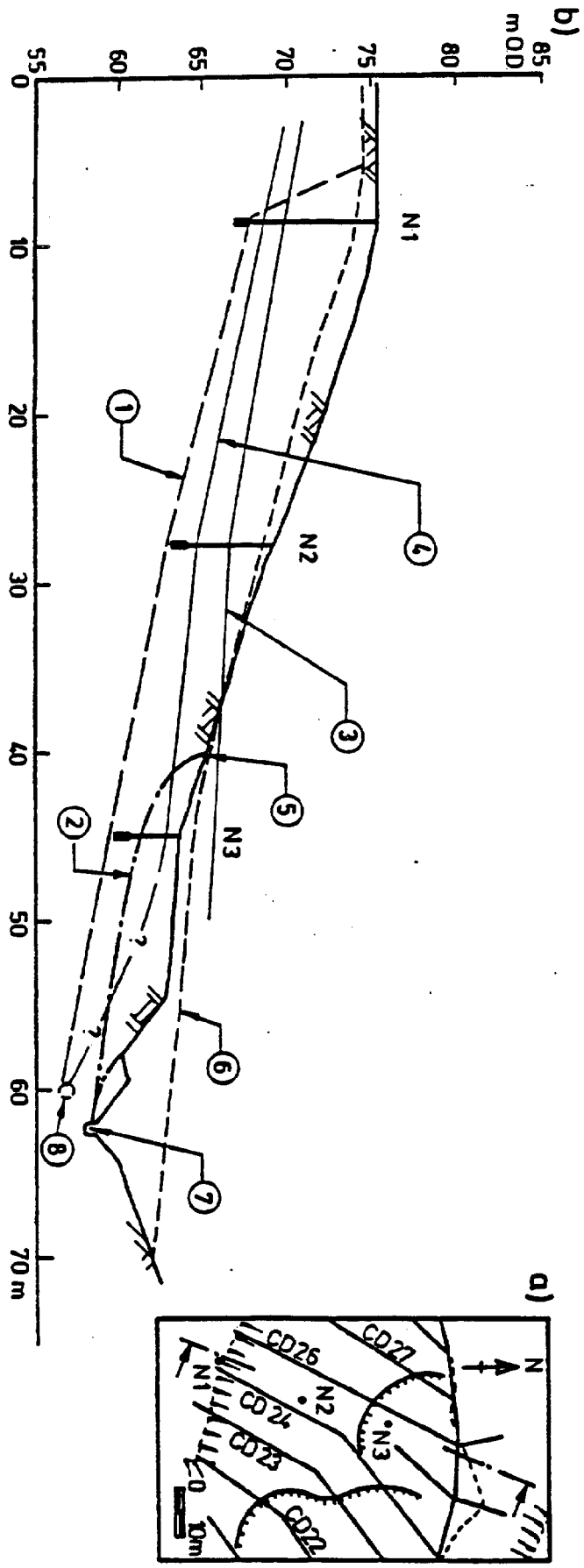

Fig. 19 a, b)

It is suggested that, until further observations become available, the curves H and G in Fig. 21b can be regarded as tentative upper and lower bounds for the design of trench or counterfort drains in overconsolidated clay slopes under temperate climatic conditions, up to an S/h_o ratio of 5 or 6. Higher ratios than this are unlikely to be under consideration. Curve G is likely to be a conservative lower bound, unless in a given case the n and R_k values or the hydrology are particularly unfavourable.

All the drainage installations in natural slopes that are listed in Table 1 appear to have been successful as a stabilizing measure. The efficacy of such drains in cut slopes is less assured, and several examples of failures subsequent to the installation of counterfort drains in railway cuttings in stiff fissured clays are given by Cassel /1948/ and by Ayres /1961/. This is probably due in part to the generally steeper slopes and shorter lengths of drain involved.

It is hoped to make a more detailed examination of trench and counterfort drains, including an examination of the necessary criteria for preventing the occurrence of slips between such drains and the effects of underdrainage, or of artesian pressures at depth, in a forthcoming papert with Mr E.N. Bromhead.

Clogging of drains

Drainage, as mentioned earlier, is one of the most effective and most used of stabilizing measures for slopes. At the same time, there is generally associated with such drainage installations some degree of doubt concerning their long-term performance.

Clogging of both pipe and permeable aggregate drains probably occurs most commonly by the ingress and lodging of silts and fine sands. Much attention has been devoted to this problem, particularly to the design of filters, and there is a correspondingly large literature on this subject, briefly summarised, for example, by Spalding /1970/ and Cedergren /1975/.

The matter is not yet fully resolved, however, and as in practice both specifications and workmanship, frequently fall below a good standard, cases of clogging by siltation are probably quite common, as indicated by Keene /1951/. Well detailed case records of this type of failure are less so, but there are indications that permeable aggregate drainage systems without proper filter protection may tend to silt up after a working life of about 10 to 20 years.

In the case of some bored horizontal drains in Derbyshire, the following information has been kindly provided by Mr C.V. Underwood, the County Surveyor /pers. comm./. Fifteen perforated PVC drains, of internal diameter 40 mm and lengths between 30 and 40 m, were installed without filters in 1971 at an angle of 5^0 above the horizontal through laminated silty clays. By 1975 all the drains had become inoperative, largely through siltation. The earlier horizontal drain installation at Otley in Yorkshire, however, constructed in 1964-67 using galvanised iron drains provided generally with pre-cast porous concrete filters, still appears to be working satisfactorily /G.R. Forrester, pers. comm./.

Some other ways which drains become clogged are listed by Keene /1951/. Nevertheless, after siltation it is probable that geo- and biochemical factors pose the greatest threat to the satisfactory operation of drainage systems, yet this subject has been largely neglected by civil engineers. There is a fairly extensive literature on the subject, however, in the fields of agricultural engineering and water supply. One of the most common geochemical effects is the precipitation of hydrated ferric oxide /iron ochre/. Useful studies of iron /and manganese/ ochre in near-surface agricultural drains have been made by Alcock /1973/ and by Thorburn & Trafford /1976/. The latter authors distinguish two main groups of ochre forming soils; peats and slightly organic marine sediments and pyrite-bearing rocks. A detailed discussion of measures adopted to prevent ochre deposition occurring in a deeper, civil engineering drainage system in Antwerp is given by Brand /1968/. In the earth dam context, problems arising from the geochemical and biochemical precipitation of iron compounds are discussed in a pioneering paper by Infanti & Kanji /1974/. They present a photograph showing a sand filter ce-

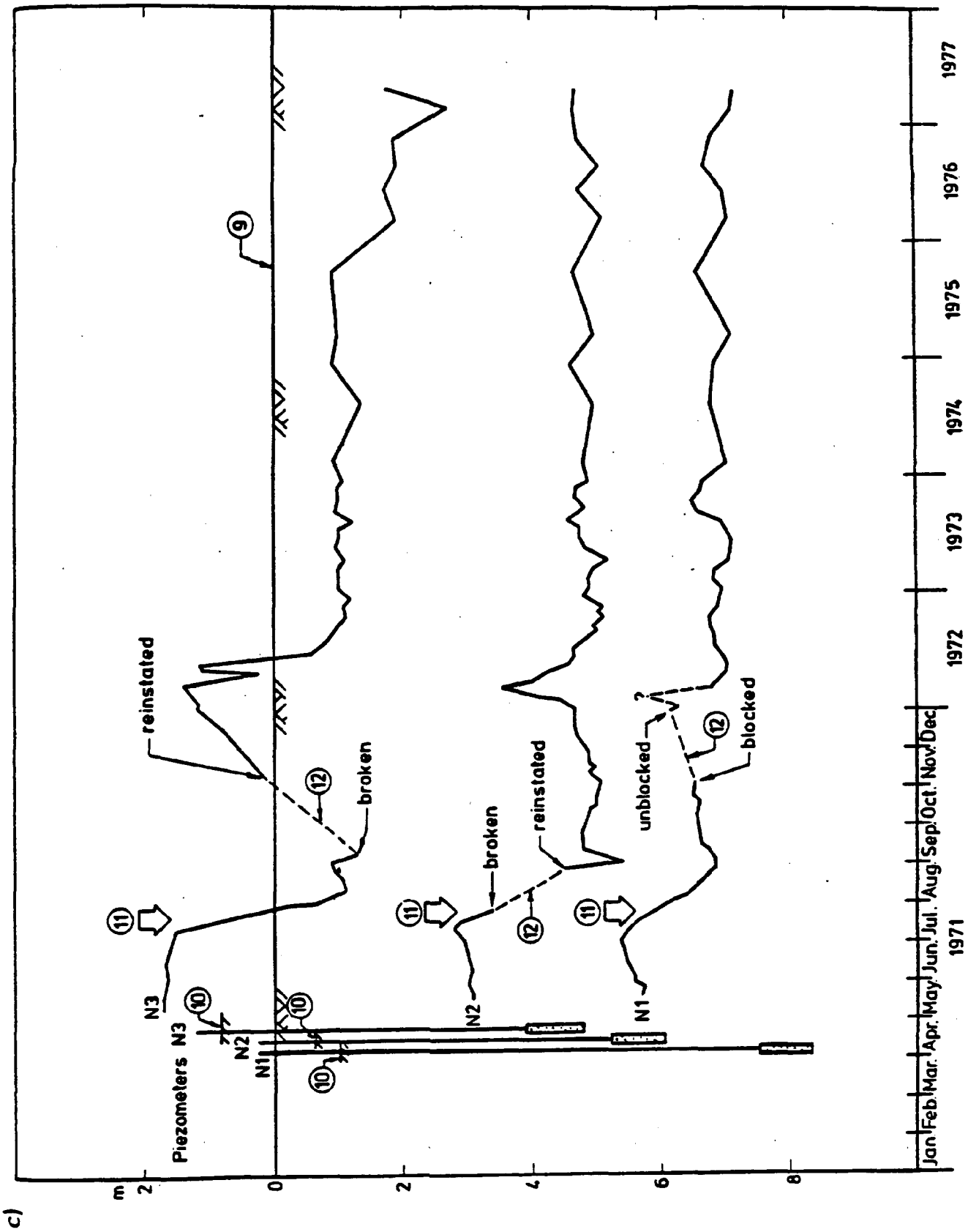

Fig. 19 : Long term comparison of piezometric levels before and after drainage at Boulby, Yorkshire (with acknowledgements to Cleveland Potash Ltd):

a) Site plan (CD = counterfort drain).

b) Cross-section through piezometers N1 to N3.

c) Variation of piezometric levels with time.

(1) Invert of drains. (2) Approximate slip surface. (3) Max. piezometric levels measured before drainage. (4) Max. recorded piezometric levels in the period from 1 to 6 years after drain installation. (5) Slip scarp. (6) Regraded profile. (7) Stream. (8) Culvert. (9) Original ground level. (10) Regraded ground levels. (11) Installation of trench drains. (12) Piezometers temporarily out of action.

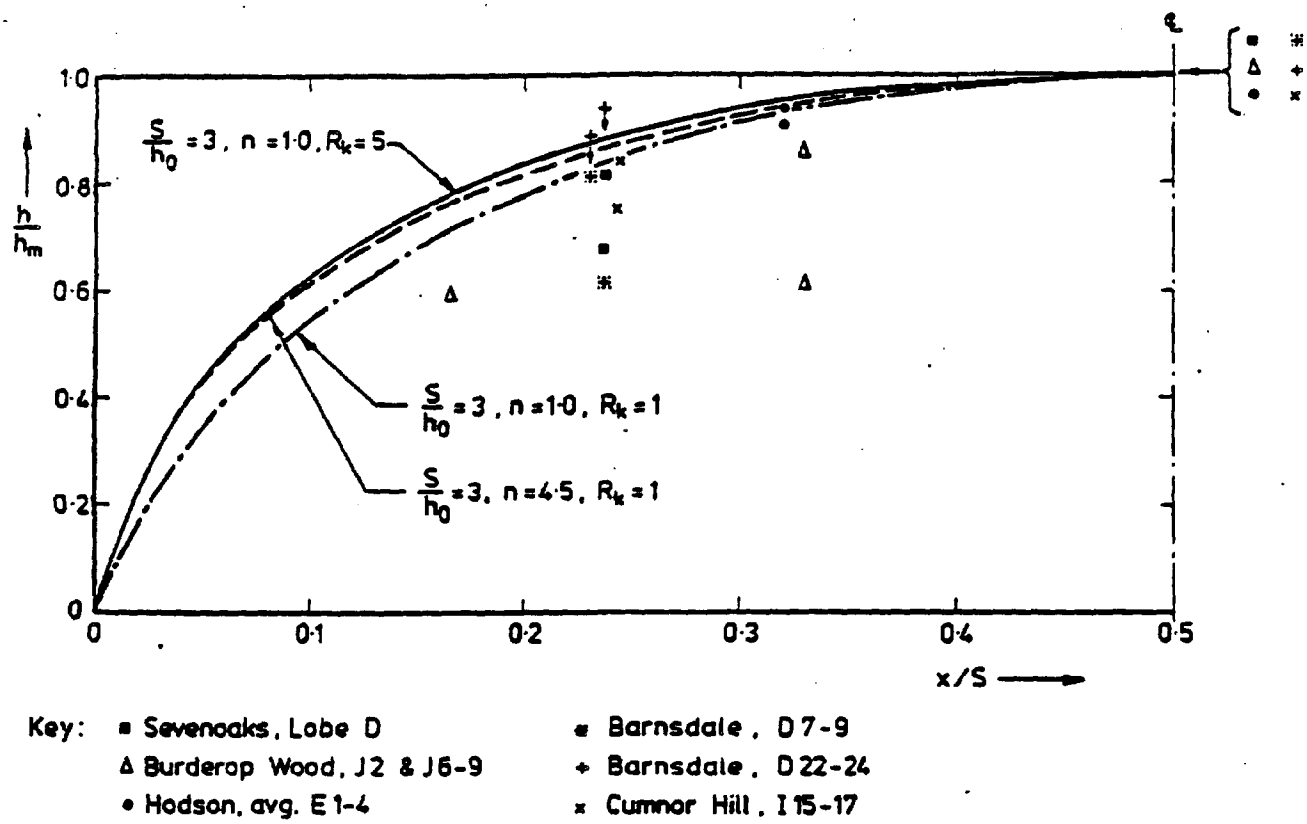

Key: ■ Sevenoaks, Lobe D
Δ Burderop Wood, J2 & J6-9
• Hodson, avg. E 1-4
✱ Barnsdale, D 7-9
+ Barnsdale, D 22-24
× Cumnor Hill, I 15-17

Fig. 20 : Computed relationships between h/h_m and x/S for $R_k = 1$ and 5 and $n = 1$ and 4.5, compared with the available field data.

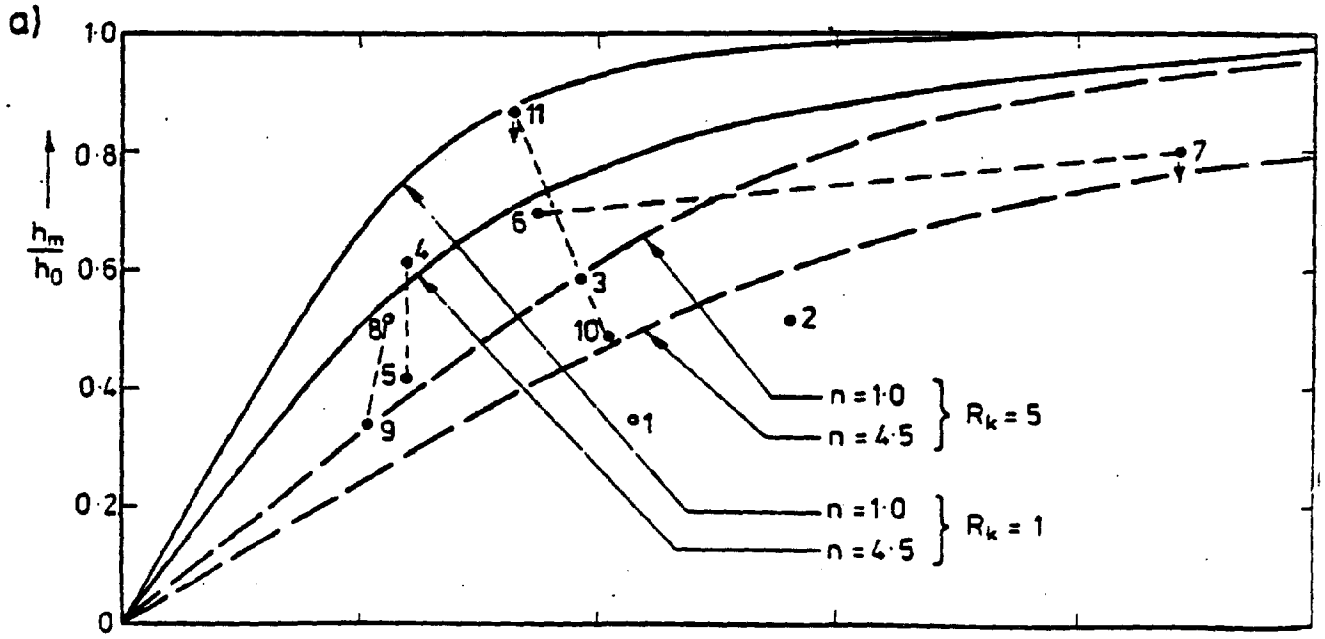

Fig. 21 a)

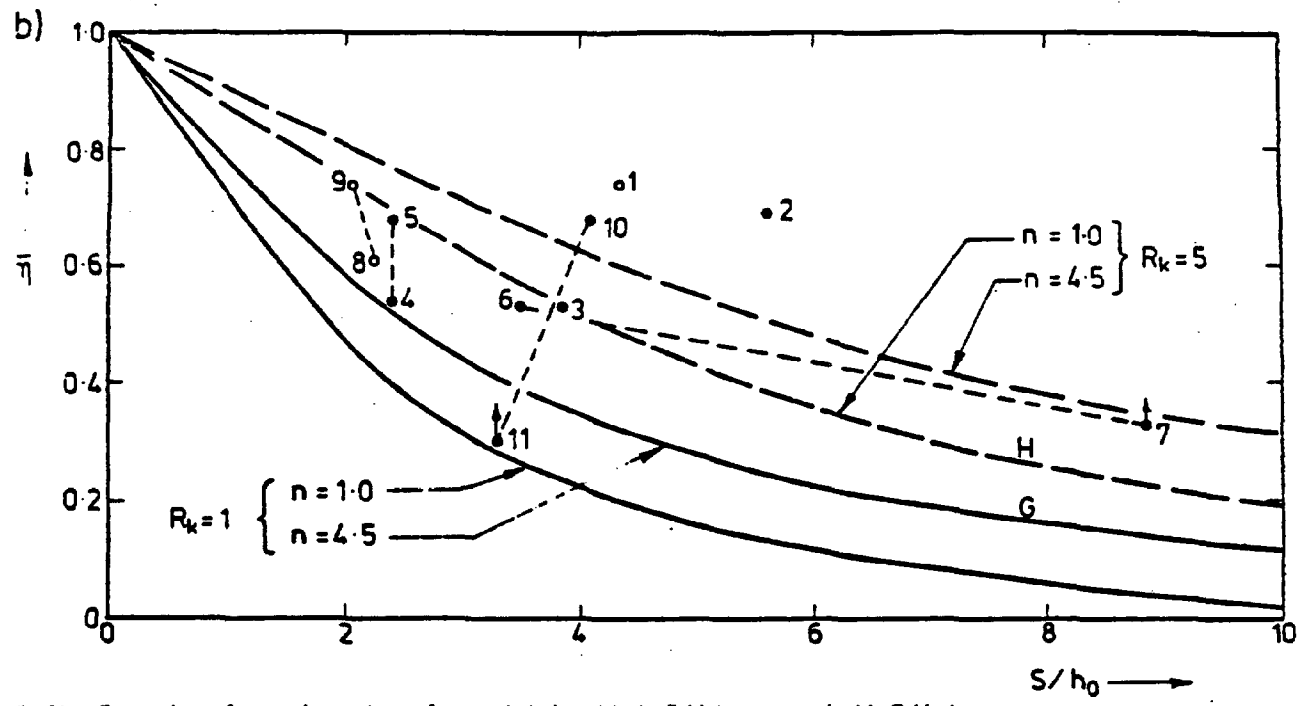

Fig. 21 : Comparison of approximate theory for trench drains with the field data summarised in Table 1.
a) Computed relationship between h_m/h_0 and S/h_0 for R_k = 1 and 5 and n = 1 and 4.5, compared with the field data.
(For key to the numbering of the points (in Figs. 21a) and b)), refer to Table 1. Solid circles indicate the more reliable data).
b) Computed relationship between $\bar{\eta}$ and S/h_0 for R_k = 1 and 5 and n = 1 and 4.5, compared with the field data.
(In both Fig. 21a) and b), points from the same site are connected by a broken line.)

mented up by such processes, which are probably akin to those which form iron pans in natural ground. There is also some experience of well screen clogging through bacterial and other activity /M.S. Eglinton, pers. comm./.

Cases of clogging through the precipitation of other materials seem to be less common but blockage of drains, flowing partly full, by encrustations of calcium carbonate have been reported from limestone areas.

Drains made from artificial fabrics are currently being developed for use in civil engineering /e.g. Healy & Long, 1972, Long & Healy, 1977/. These seem promising and do enable the manufacture of the filter element to be closely controlled under factory, rather than site, conditions. Preliminary tests however, indicate that clogging by silt is still a problem /Hoogendoorn & van der Meulen, 1977/. Further development and continuing testing of these materials is clearly necessary. The scope of the testing should also be widened to include geochemical and biochemical factors.

2 - SUBMITTED PAPERS

The 10 papers on Theme 3 cover the following main topics: site investigation, regional landslide studies, various slope stabilization works and dynamic effects.

The paper by Yamaguchi describes the use of repeated electrical resistivity surveying on a recent landslide in order to guide in the location of drainage wells and to check their efficacy. Wells are sited in zones of low apparent electrical resistivity, considered to correlate with an abundance of ground-water, or greatest slide danger. The first such well gave a strong discharge and a subsequent repeat of the resistivity survey showed that the associated zones of low apparent resistivity had disappeared. The method seems a very indirect way evaluating ground-water pressure distributions but is clearly much cheaper and quicker than the conventional one using piezometers. It could add to the value of a future trial of this method if the pre- and post-drainage situations were to be checked with piezometers.

The paper by Bazyński & Frankowski describes the investigation and stability analysis of a landslide affecting a railway cutting at Sadowie. The slide originated in 1934 and involves loess overlying Miocene clays. In the investigation, Dutch penetrometer tests were much used, but it is not clear to what extent these were useful. In the stability analysis of this slide on pre-existing slip surfaces it is disturbing to find no mention of residual strength, and that the strength testing and stability analyses are carried out in terms of total stresses.

An interesting, though tantalisingly brief, description of landslide problems on about 600 km of mountain roads in N. Bengal and Sikkim, is given by Chopra. The complexity of mass movements in such a region, and the importance of good road location, surface drainage and the control of erosion, are well brought out.

In his paper, Fujita reviews the occurrence of slides around reservoir margins in Japan, with particular reference to the influence on these of variations in reservoir water level. The paper gives a number of case records of slides occurring both on flooding as well as on drawdown. Much of the work done at Vaiont /e.g. Kenney, 1967/ is relevant to this topic and one would also have expected to find reference to the concept of critical pool level.

Menci, Papoušek & Paseka report on a case where an unstable slope of marly Neogene clays NW of Brno was successfully built upon. Despite complex geological and hydrogeological conditions, useful backcalculations of the stability of some of the landslides are made. As often found elsewhere, at comparable stress ranges, the laboratory value of residual strength lies 2 or 3 degrees below the values obtained by back analysis. The slopes were stabilised mainly by a combination of an anchored pillar wall and some horizontal drains and by minimising the size of cuts for roads and sewers. No monitoring of these measures is reported.

The paper by Flimmel deals with horizontal drain and pile wall installations in a more general way. Useful practical experience, gained on numerous landslide stabilisation schemes in Czechoslovakia, is given for both the above types of corrective measure. Some guidance is also given on the drain discharges and lowerings of

ground-water level achieved. No mention is made of filters being provided on the horizontal drains.

A brief account of the stabilisation of an 80 m high rock slope in N. Bohemia, mainly by the use of pre-stressed, horizontal cable anchors, is provided by Zajíc. An outline is given of the comprehensive joint survey made and of the anchor design. It is to be hoped that long-term monitoring of this installation, which is currently being carried out, will be undertaken.

The final three papers all deal with dynamic aspects of slope stability, with particular reference to blasting. Musaelyan, Kochurov & Lavrusevitch describe field experiments in which the response of loess slopes to blasting was examined. The blasting was not carried out until the settlement of the loess, following preliminary wetting had been completed. The seismicity factor measured, for which the slope movements are known, is compared with those associated with natural earthquakes. Dvořák discusses the technique of removing parts of a landslide by blasting, for instance as part of the stabilization of a rock mass. He gives an example of a rock slide unintentionally initiated by blasting and suggests an approach whereby the appropriate size of blasting charge, that will not endanger the overall stability, can be determined. Finally, in a rather general paper, Shahunants & Fedorenko discuss principles of slope stabilization and management in folded mountain regions. These include, in addition to normal slope stabilization measures, the provision of dykes to deflect or retain landslide and mudflow debris, the provision of overflow channels around dams formed by large natural landslides and the use of conventional and nuclear explosion to shake down threatening masses. In the latter connection it is pointed out that reliable methods of predicting the run-out of slides are not yet available.

3 - RESEARCH NEEDS

Development of our knowledge of the efficacy of slope stabilization measures depends primarily on comprehensive and long-term monitoring of the performance of the various methods in use. In general, the essence of such monitoring is the carrying out of basic operations, such as the measurement of movements, stresses, pore-water pressures and drain discharges, in a well planned and thorough manner. In other words, although there is obviously room for its further development, sufficient technology already exists; it is interest and determination that are crucial if a valuable body of detailed case records is to be built up.

In the case of corrective cuts and fills, the main pre-requisite of success is a proper investigation of the landslide itself. The monitoring of movements, at the ground surface and preferably also with depth, should be an invariable practice and the values of $\bar{B}$ during construction should be measured by suitable piezometers. The main research needs here concern the difficulties of assessing the degree of stability of the existing slopes or landslides and of deciding what is an appropriate degree of improvement. In this connection, more knowledge of stress-strain conditions throughout the whole landslip mass especially in the approach to failure is required. This advance beyond the constraints of the limit equilibrium approach will also need to be accompanied by a re-examination of the usual ideas of „factor of safety".

With respect to drainage measures, there is a great need for properly monitored performance records of all the methods. The initial ground-water conditions should first be established for at least one full season, and preferably longer. In addition, measurements of the variation of permeability with depth, and the permeability ratio k_h/k_v, are highly relevant. As drainage can take a considerable time to become effective, long-term monitoring of its progress is essential. This needs to cover not merely the consolidation phase but also the succeeding steady state phase, in order to discover any deterioration through clogging or other causes.

In most drainage systems, the danger of clogging is usually present. Much effort is required here, not only in a research context but also to devise means of protection against clogging which will be satisfactory under site conditions. It is also important for this research to cover clogging through geo- or bio-chemical processes as well as that which can arise by siltation.

Concerning the considerable variety of other corrective techniques, only three research needs will be touched upon. In the case of permanent soil or rock anchors, efforts should be made to explore more fully their long-term behaviour, particularly with regard to stress loss and corrosion. For other corrective structures, and particularly for heavy cantilevered or anchored pile restraining structures there is a need for more measurements of deflections and earth pressures, and study of the relation between these. There is also room for further exploration of the extent to which geophysical investigation techniques can be of help in stabilization work.

Finally, in view of the close link between landslides and erosion, it would seem advisable to direct more attention towards methods of controlling the latter, on both the local and the regional scale.

Acknowledgements

The author is grateful to Mr. E.N. Bromhead, of Kingston Polytechnic, for running the stability analyses for the various influence lines, for carrying out the finite element seepage analyses, and for helpful discussions. He also wishes to thank Dr.E.G. Youngs, of the A.R.C. Unit of Soil Physics, for a useful discussion. At Imperial College he wishes to thank Prof A.W. Skempton for his generous provision and discussion of unpublished data and Professor A.W. Bishop, Dr. R.J. Chandler, Dr. M. Hamza, Dr. S.K. Sarma and Dr. P.R. Vaughan for various discussions. He is also indebted to the librarians of the Civil Engineering Department, and to many fellow engineers and engineering geologists elsewhere, for help in covering the relevant literature.

For the Guildford data, the author acknowledges with thanks the contributions of Prof. N.E. Simons, of the University of Surrey, Prof. R.E. Gibson, of King's College, London, and Mr. J.H. Armstrong and Mr. A. Aarons of the Building Design Partnership. For the Hodson and Burderop Wood data he is grateful, not only to Professor Skempton, but also to Sir Alexander Gibb and Partners and the South-Eastern Road Construction Unit, while for the Boulby data he is indebted to Mr. A. Brockbank and Mr.C.G. Pattison, of Imperial Chemical Industries Ltd Agricultural Division, and to the Cleveland Potash Ltd. For the information on Bredon Hill and on Cumnor Hill he is grateful, respectively, to Professor A.W. Skempton & Dr. D.J. Henkel and Coventry Corporation, and to A.G. Weeks and Partners and Mr. J. Peverel-Cooper, County Surveyor and Engineer, Oxfordshire County Council.

References

ALCOCK M. /1973/: A survey of ochrous land drainage sites in England and Wales. Min. of Ag., Fisheries & Food, Field Drainage Experimental Unit, Tech. Bull. 73.2, 1-7.

ANDREWS G.H. - KLASSELL J.A. /1964/: Cylinder pile retaining wall. Highway Research Record, No. 56, 83-97.

ANON /1965/: Cliff stabilisation scheme. East Cliff , Bournemouth, being protected with sand drains. The Surveyor and Municipal Engineer, 125, /2 January/, 25.

AYRES D.J. /1961: The treatment of unstable slopes and railway track formations. J. & Trans. Soc. of Engrs, 52, 111-138.

BAKER R.F. - MARSHALL H.C. /1958/: Control and correction - In: Landslides and engineering practice. /ed. E.B. Eckel/, 150-188. Highway Research Board-Special Report 29.

BALDOVIN G. - FATTORE A. /1974/: Example of slope stabilisation in marly-sandstone Flysch. Proc. 3rd Cong. Int. Soc. Rock Mech., Denver, II-B, 759-764.

BARATA F.E. /1969/: Landslides in the tropical region of Rio de Janeiro. Proc. 7th Int. Conf. Soil Mech. & Foundn Engrg, Mexico, 2, 507-516.

BARRON K. - COATES D.F. - GYENGE M. /1971/: Support for pit slopes. Canadian Institute of Mining & Metallurgy Bull. 64, /March/, 113-120.

BAZYŃSKI J. - FRANKOWSKI Z. /1977/: Site investigations and calculations of the stability of slopes in the landslide area at Sadowie near Cracow. Symp. Int. Assoc. Engrg Geol., Prague. Paper on Theme 3.

BELES A.A. - STANCULESCU I.I. /1958/: Thermal treatment as a means of improving the stability of earth masses. Geotechnique, 8, 158-165.

BISHOP A.W. /1954/: The use of the slip circle in the stability analysis of slopes. Proc. European Conf. on Stability of Earth Slopes /Stockholm/, 1, 1-13, and Geotechnique, 5, 7-17.
BISHOP A.W. - BJERRUM L. /1960/: The relevance of the triaxial test to the solution of stability problems. Proc. Research Conf. Shear Strength of Cohesive Soils, Boulder, Colorado, 437-501.
BJERRUM L. - JOHANNESSEN I.J. /1960/: Pore pressures resulting from driving piles in soft clay. Conf. Pore pressure & suction in soils, 14-17. London: Butterworths.
BJERRUM L. - JØRSTAD F. /1968/: Stability of rock slopes in Norway. Norwegian Geotechnical Institute, Pub. No. 79, 1-11.
BJERRUM L. - LÖKEN T. - HEIBERG S. - FOSTER R. /1969/: A field study of factors responsible for quick clay slides. Proc. 7th Int. Conf. Soil Mech. & Foundn. Engrg., Mexico, 2, 531-540.
BJERRUM L. - MOUM J. - EIDE O. /1967/: Application of electro-osmosis to a foundation problem in a Norwegian Quick Clay. Geotechnique, 17, 214-235.
BRAND E.W. /1968/: Solution of an unusual subsurface drainage problem. J. Irrign & Drainage Div. A.S.C.E., 94, /IR2/, 199-221.
BRANDL H. /1976/: Die Sicherung von hohen Anschnitten in rutschgefährdeten Verwitterungsböden. Proc. 6th European Conf. Soil Mech. & Foundn Engrg, Vienna, 1.1, 19-28.
BRAWNER C.O. /1959/: The landslide problem in British Columbia highway construction. Proc. 13th Canadian Soil Mech. Conf., 45-60.
BRAWNER C.O. /1971/: Case studies of stability on mining projects. Chap. 12 in Stability in Open Pit Mining. /Eds. Brawner C.O. & Milligan V./ Proc. 1st Int. Conf. Stability in Open Pit Mining, Vancouver, 205-226.
BROMS B.B. /1969/: Stability of natural slopes and embankment foundations: Discussion. Proc. 7th Int. Conf. Soil Mech. & Foundn Engrg, Mexico, 3, 385-394.
BROMS B.B. /1975/: Landslides. Chap. 11 in Foundation Engineering Handbook /Eds. Winterkorn, H.F. & Fang H-Y/, 373-401. New York: Van Nostrand Reinhold Company.
BROMS B.B. - BENNERMARK H. /1968/: Shear strength of soft clay, Discussion. Proc. Geotech. Conf., Oslo, 2, 118-120.
BROWN C.B. - SHEU M.S. /1975/: Effects of de-forestation on slopes. J. Geotechnical Div. ASCE, 101, /GT2/, 147-165.
BUJAK M. - GLAB W. - MORACZEWSKI K. - WOLSKI W. /1967/: Preventive measures against the rock slide at Tresna Dam site. Proc. 9th Congr. Large Dams, Istanbul, 1, 1027-1036.
CAMBEFORT H. /1966/: Les ouvrages ancrés au sol. Travaux, Mai 1966, 834-847.
CASAGRANDE L. - LONGHNEY R.W. - MATICH M.A.J. /1961/: Electro-osmotic stabilization of a high slope in loose saturated silt. Proc. 5th Int. Conf. Soil Mech. & Foundn. Engrg., Paris, 2, 555-561.
CASAGRANDE L. - McIVER B.N. /1971/: Design and construction of tailings dams. Chap. 11 in Stability in Open Pit Mining /Eds. Brawner C.O. & Milligan, V./ Proc. 1st Int. Conf. Stability in Open Pit Mining, Vancouver, 181-203.
CASSEL F.L. /1948/: Slips in fissured clay. Proc. 2nd Int. Conf. Soil Mech. & Foundn Engrg, Rotterdam, 2, 46-50.
CEDERGREN H.R. /1967/: Seepage, drainage and flow nets. New York: John Wiley & Sons, Inc.
CEDERGREN H.R. /1975/: Drainage and dewatering. Chap. 6 in Foundation Engineering Handbook /Eds. Winterkorn H.R. & Fang H-Y/, 221-243. New York: van Nostrand Reinhold Company.
CHANDLER R.J. /in press/: Back analysis techniques for slope stabilization works: a case record. Geotechnique.
CHOI Y.L. /1974/: Design of horizontal drains. J. Engrg Soc. of Hong Kong, Dec. 1974, 37-49.
CHOPRA B.R. /1977/: Landslides and other mass movements along roads in Sikkim and North Bengal. Symp. Int. Assoc. Engrg Geol., Prague. Paper on Theme 3.
COLAS G. - MOGIER J.C. - URSAT P. /1976/: Stabilisation des sols stériles par enherbement. Bull. de liaison des laboratoires des ponts et chaussées, „Stabilité des talus", Numéro special III, 161-168.
COLENUTT G.W. /1928/: The cliff-founder and landslide at Gore Cliff, Isle of Wight. Proc. Isle of Wight Nat. Hist. & Archeol. Soc., 1, 561-570.
COLLIN A. /1846/: Recherches expérimentales sur les glissements spontanés des terrains argileux. Paris: Carilian - Goeury et V. Dalmont.
COPPERTHWAITE H. /1880/: Earthwork slips on the Leeds & Wetherby Branch Railway. Min. Proc. Instn Civil Engrs., 62, 285-287.
COSTA NUNES A.J. /1966/: Slope stabilization; improvements in the techniques of prestressed anchorages in rocks and soils. Proc. 1st Cong. Int. Soc. Rock Mech., Lisbon, 2, 141-146.
COSTA NUNES A.J. /1969/: Landslides in soils of decomposed rock due to intense rainstorms. Proc. 7th Int. Conf. Soil Mech. & Foundn Engrg., Mexico, 2, 547-554.
COSTA NUNES A.J. - VELLOSO D.A. /1963/: Estabilização de taludes em capas residuais de origem granito-gnaissica. Proc. 2nd Panam. Conf. Soil Mech. & Foundn Engrg., São Paulo, 2, 383-394.
D'APPOLONIA E. - ALPERSTEIN R. - D'APPOLONIA D.J. /1967/: Behaviour of a colluvial slope. J. Soil Mechs & Foundns Div., ASCE., 93, /SM4/, 447-473.
DE BEER E.E. /1969/: Experimental data concerning clay slopes. Proc. 7th Int. Conf. Soil Mech. & Foundn Engrg, Mexico, 2, 517-525.
DE BEER E.E. - WALLAYS M. /1970/: Stabilization of a slope in schists by means of bored piles reinforced with steel beams. Proc. 2nd Congr. Int. Soc. Rock Mech. Belgrade, 3, 361-369.
DOCKRAY J.B. /1844/: Discussion on Gregory /1844/. Min. Proc. Instn Civil Engrs, 3, 148-150.
DUNCAN J.M. /1971/: Prevention and correction of landslides. 6th Ann. Nevada Street & Highway Conf. Section II, 1-42.
DUNCAN J.M. /1976/: Notes on slope stabilization. University of California, Berkeley. Unpublished.
DUVIVIER J. /1940/: Cliff-stabilization works in London Clay. J. Instn. Civil Engrs, 14, 412-426; Discussion 427-446.
DVOŘÁK A. /1977/: Landslides caused by blasting. Symp. Int. Assoc. Engrg Geol., Prague. Paper on Theme 3.
EARLY K.R. - SKEMPTON A.W. /1972/: Investigation of the landslide at Walton's Wood, Staffordshire. Q.J. Engrg Geol., 5, 19-41.
EAST G.R.W. /1974/: Remedial measures and case histories: Inclined plane slope failures in the Auckland Waitemata soils. Three cases with different remedial measures. Proc. Symp. Stability of Slopes in Natural Ground, Nelson, /New Zealand Geomechanics Society/, 5.17-5.34.
EGGESTAD A. - SEM H. /1976/: Stability of excavations improved by salt diffusion from deep wells. Proc. 6th European Conf. Soil Mech. & Foundn. Engrg, Vienna, 1.1, 211-216.
FINZI D. - NICCOLAI C. /1961/: Slope consolidation of the banks of the Monguelfo Reservoir, Italy. Proc. 5th Int. Conf. Soil Mech. & Foundn Engrg, Paris, 2, 591-594.
FLIMMEL I. /1977/: Horizontal drainage borings and cast-in-situ pile walls as stabilization treatment of landslides in sedimentary rocks. Symp. Int. Assoc. Engrg Geol., Prague. Paper on Theme 3.
FOOKES P.G. - SWEENEY M. /1976/: Stabilization and control of local rockfalls and degrading rock slopes. Q.J. Engrg Geol., 9, 37-55.
FUJITA H. /1977/: Influence of water level fluctuations in a reservoir on slope stability. Symp. Int. Assoc. Engrg Geol., Prague. Paper on Theme 3.
GOLDER H.Q. /1971/: The stabilization of slopes in open-pit mining. Chap. 10 in Stability in Open Pit Mining. /Eds. Brawner, C.O. & Milligan V./ Proc. 1st Int. Conf. on Stability in Open pit Mining, Vancouver, 169-180.
GORDON G. /1937/: Freezing arch across toe of East Forebay Slide, Grand Coulee Dam. The Reclamation Era, 27, 12-16.
GRAY D.H. /1970/: Effects of forest clear-cutting on the stability of natural slopes. Bull. Assoc. Engrg Geologists, 7, 45-66.
GRAY D.H. /1974/: Reinforcement and stabilization of soil by vegetation. J. Geotech. Engrg Div., ASCE, 100 /GT6/, 695-699.
GREGORY C.H. /1844/: On railway cuttings and embankments with an account of some slips in London Clay, on the line of the London and Croydon Railway. Min. Proc. Instn. Civil Engrs, 3, 135-145.
GUNLEIKSRUD T. /1968/: Frysestabilisering i forbindelse med

tunneiras. Nordiska Geotekniker Mötet. Väg-och vatten byggaren, 8, 30-33.
HANDY R.L. - WILLIAMS W.W. /1967/: Chemical stabilization of an active landslide. Civil Engineering, 37, 62-65.
HEALY K.A. - LONG R.P. /1972/: Prefabricated filter-fin for subsurface drains. J. Irrign & Drainage Div. ASCE. 98, /IR4/, 543-552.
HENKE K.F. /1968/: Böschungssicherung durch horizontale Drainagebohrungen. Strassen u. Tiefb., 22, 74-80.
HENKEL D.J. /1957/: Investigations of two long-term failures in London Clay slopes at Wood Green and Northolt. Proc. 4th Int. Conf. Soil Mech. & Foundn Engrg, London, 2, 315-320.
HENKEL D.J. /1960/: The shear strength of saturated remoulded clays. Proc. Research Conf. Shear Strength of Cohesive Soils, Boulder, Colorado, 533-554.
HILL R.A. /1934/: Clay stratum dried out to prevent landslips. Civil Engineering, 4, 403-407.
HILLS R.C. /1971/: The influence of land management and soil characteristics on infiltration and the occurrence of overland flow. J. Hydrology, 13, 163-181.
HOEK E. - BRAY J.W. /1974/: Rock slope engineering. London: Instn of Mining & Metallurgy.
HOLM O.S. /1961/: Stabilization of a quick clay slope by vertical sand drains. Proc. 5th Int. Conf. Soil Mech & Foundn Engrg. Paris, 2, 625-627.
HOOGENDOORN A.D. - VAN DER MEULEN T. /1977/: Preliminary investigations on clogging of fabrics. Int. Conf. on Use of Fabrics in Geotechnics, Paris, 2, 177-182.
HUTCHINSON J.N. /1968/: Mass movement. In The Encyclopedia of Geomorphology /Ed. R.W. Fairbridge/, 688-695.
HUTCHINSON J.N. /1969/: A reconsideration of the coastal landslides at Folkestone Warren, Kent. Geotechnique, 19, 6-38.
HUTCHINSON J.N. /1973/: The response of London Clay cliffs to differing rates of toe erosion. Geologia Applicata e Idrogeologia, 8, 221-239.
HUTCHINSON J.N. - SOMMERVILLE S.H. - PETLEY D.J. /1973/: A landslide in periglacially disturbed Etruria Marl at Bury Hill, Staffordshire. Q.J. Engrg. Geol., 6, 377-404.
INFANTI N.Jr. - KANJI M.A. /1974/: Preliminary considerations on geochemical factors affecting the safety of earth dams. 2nd Int. Congr. Int. Assoc. Engrg Geology, São Paulo, 4, 33.1-33.11.
KEENE P. /1951/: Present practice in subsurface drainage for highways and airports. Highway Research Bull. No. 45, 1-20.
KENNEY T.C. /1967/: Stability of the Vajont Valley slope. Felsmechanik u. Ingenieurgeologie, 5, 10-16.
KENNEY T.C. - PAZIN M. - CHOI W.S. /1976/: Horizontal drains in homogeneous slopes. 29th Canadian Geotech. Conf., Vancouver, VI.1-VI.15.
KEZDI A. /1969/: Landslide in loess along the bank of the Danube. Proc. 7th Int. Conf. Soil Mech & Foundn Engrg. Mexico, 2, 617-626.
KLENGEL K.J. - HAMMERSCHMIDT K. - MÜLLER E. /1974/: Böschungssicherung und -sanierung bei Autobahnneubau. Z. geol. Wiss. Berlin, 2, 371-380.
LANG H.J. /ed./ /1976/: Nationalstrasse N8 in Obwalden. Bauabschnitt Alpnachstad-Kantonsgrenze Nidwalden. Mitt. Inst. für Grundbau u. Bodenmechanik ETH Zürich, Nr. 106.
LANG T.A. /1961/: Theory and practice of rock bolting. Trans. Amer. Instn Min. Engrs, 220, 333-348.
LA ROCHELLE P. - LEFEBVRE G. - BILODEAU P.M. /1976/: The stabilization of a slide in Saint-Jerome, Lac Saint-Jean. 29th Canadian Geotech. Conf., Vancouver, XI.37-XI.53.
LEFEBVRE G. - LAFLEUR J. /1976/: Evaluation of vertical drainage as a stabilizing agent in a clay slope at Hull, Quebec. 29th Canadian Geotech. Conf., Vancouver, VI.16-VI.30.
LITTLEJOHN G.S. - NORTON P.J. - TURNER M.J. /1977/: A study of rock slope reinforcement at Westfield open pit and the effect of blasting on pre-stressed anchors. Proc. Conf. on Rock Engineering, University of Newcastle upon Tyne, 293-310.
LITVINOV I.M. - RZHANITZIN B.A. - BEZRUK V.M. /1961/: Stabilization of soil for constructional purpose. Proc. 5th Int. Conf. Soil Mech & Foundn Engrg., Paris, 2, 775-780.
LONG R. - HEALY K. /1977/: Fabric filters on pre-fabricated underdrains. Int. Conf. on Use of Fabrics in Geotechnics, Paris, 2, 237-241.
LUTTON R.J. - BANKS D.C. /1970/: Study of clay slopes along the Panama Canal. Rept. 1. East Culebra and West Culebra Slides and the Model Slope. U.S. Army Engineer Waterways Experiment Station, Vicksburg, Mississippi.
MATSUBAYASHI M. /1972/: On the groundwater cut-off work with chemical groutings and its effectiveness in landslide area. Landslide, 9, 21-32.
MEHRA S.R. - NATARAJAN T.K. /1966/: Handbook on landslide analysis and correction. New Delhi: Central Road Research Institute.
MEHRA S.R. - NATARAJAN T.K. - GUPTA S.C. /1967/: Practical lessons in landslide correction. Road Research Papers, Delhi, No. 88, 1-31.
MENCL V. - PAPOUŠEK Z. - PASEKA A. /1977/: Building on a landslide area situated on the boundary of the Carpathian foredeep. Symp. Int. Assoc. Engrg Geol., Prague. Paper on Theme 3.
MITCHELL J.K. /1956/: The fabric of natural clay and its relation to engineering properties. Proc. Highw. Res. Bd., 35, 693-713.
MITCHELL J.K. /1970/: In-place treatment of foundation soils. J. Soil Mech & Foundns Div., ASCE. 96, /SM1/, 73-110.
MITCHELL J.K. /1976/: Fundamentals of soil behaviour. New York: John Wiley & Sons, Inc.
MORGENSTERN N.R. - PRICE V.E. /1965/: The analysis of the stability of general slip surfaces. Geotechnique, 15, 79-93.
MOUM J. - SOPP O.I. - LØKEN T. /1968/: Stabilization of undisturbed quick clay by salt wells. Norwegian Institute Publn. No. 81, 1-7.
MUSAELYAN A.A. - KOCHUROV Y.G. - LAVRUSEVITCH L.V. /1977/: Some research results of dynamic stability of slopes formed of collapsible soils. Symp. Int. Assoc. Engrg Geol., Prague. Paper on Theme 3.
NATIONAL CONFERENCE OF LANDSLIDE CONTROL /1972/: Landslides in Japan. The Japan Society of Landslide.
NEWMAN J. /1890/: Earthwork slips and subsidences upon Public Works. London: E. & F.N. Spon.
NILSEN K.Y. - LIEN R. /1976/: Description of a drainage gallery for stabilising the left abutment of Muravatn Dam, Southern Norway. Trans. 12th Int. Congr. on Large Dams, Mexico City, 2, 415-427.
NONVEILLER E. /1970/: Stabilization of landslides by means of horizontal borings. European Civil Engineering, 5, 221-228.
NORTH-LEWIS J.P. - LYONS G.H.A. /1975/: Contiguous bored piles. Proc. Conf. on Diaphragm Walls & Anchorages. Instn Civil Engrs, 189-194.
PALMER L.A. - THOMPSON J.B. - YEOMANS C.M. /1950/: The control of a landslide by subsurface drainage. Proc. Highway Research Board, 30, 503-508.
PARROTT W.T. /1955/: Control of a slide by vertical sand drains. Highway Research Board Bull. 115, 51-52.
PECK R.B. - IRELAND H.O. /1953/: Investigation of stability problems. Am. Railroad Engrs Assoc. Bull., 507, 112-133.
PECKOVER F.L. - KERR J.W.G. /1976/: Treatment of rock slopes on transportation routes. 29th Canadian Geotech. Conf., Vancouver, L14-L40.
PRICE D.G. - KNILL J.L. /1967/: The engineering geology of Edinburgh Castle Rock. Geotechnique, 17, 411-432.
RAT M. /1976/: Drainages. Bull. de liaison des laboratoires des ponts et chaussées, ‚Stabilité des talus', Numéro special III, 151-160.
RICO A. - SPRINGALL G. - MENDOZA A. /1976/: Investigations of instability and remedial works on the Tijuana-Ensenada highway, Mexico. Geotechnique, 26, 577-590.
ROBINSON B. /1967/: Landslip stabilization by horizontally bored drains. Highways & Public Works, 35, /June 1967. No. 1690/, 32-33, 35 & 37.
RODDA J.C. - DOWNING R.A. - LAW F.M. /1976/: Systematic Hydrology. London, Boston: Newnes-Butterworths.
RODRIGUEZ A.R. - MENCHACA L.M.A. - PECERO G.M. /1967/: Estabilizacion de un deslizamiento en la carretera Tijuana-Ensenada. Proc. 3rd Panam. Conf. Soil Mech & Foundn Engrg., Caracas, 2, 51-64.

Selections from

REGULATIONS TO REDUCE COASTAL EROSION LOSSES

Prepared by

D. A. Yanggen

University of Wisconsin-Extension
for the
Wisconsin Coastal Management Program
January 1981

DETERMINING THE EROSION HAZARD

There are two basic approaches to determining erosion hazard -- the site specific method and the reach method. The site specific method requires a geotechnical engineering analysis at each site at the time development is proposed. This method requires a report analyzing among other things: (1) wave-induced erosion based upon recession rates and wave energy calculations; (2) geologic conditions including the soils at the site and their properties and stability; and (3) groundwater and surface water conditions. While the site specific approach may be technically accurate, it is too costly and time consuming for all but the most expensive development.

The reach method uses generalized formulas to estimate the two components of the erosion hazard, i.e., the recession rate and stable slope angle. Much of the information needed is available from studies made through the Wisconsin Coastal Management Program. There is a Shore Erosion Technical Report with technical appendices. Erosion Hazard Area Maps at a scale of 1 inch equals 2,000 feet delineate areas with erosion potential. These maps also show short-term recession rates (1966-1975) and long-term recession rates at selected intervals. For a further description of this information see Appendix A.

Estimating A Stable Slope Angle

Assuming for a moment that no further wave-induced erosion takes place, it is possible to estimate the stable angle of repose of a bluff. The ultimate angle of repose of a stable slope reflects the angle of internal friction of the materials comprising the bluff. The angle of internal friction of various materials has been documented by engineering analysis. Even

though actual bluff failure at a particular site depends upon local variations in the soil profile, groundwater conditions, vegetative cover, surface drainage and other factors, the stable angle of repose of various classes of materials can provide a reasonable rule of thumb to estimate slope stability. Thus knowing the height of a bluff, its slope angle, and the predominant material of which it is comprised takes into account some key site-specific factors.

It is possible to generalize further and establish an average stable slope angle for a range of erodible materials. A stable slope angle of 21.8 degrees (2-1/2 feet horizontal distance to 1 foot of vertical distance) appears to be a reasonable general figure based upon studies of relative slope stability of bluffs along Lake Michigan which took into account stratigraphy, parent materials, bluff height and slope angle (Shore Erosion Study -- Technical Report, February, 1977). This report shows an average drained angle of internal friction based upon laboratory tests, of 31.4° - 29.8° with one unit showing a 22.3° angle. However, the report also states that below the groundwater table, water pressure reduces the stable slope angle to about half the drained internal angle of friction. It further states that localized conditions such as artesian pressures and excess hydrostatic pressures due to seepage effects tend to reduce this stable slope angle even more. More importantly, the study did not take into account frost actions, surface wash, mudflow and similar forms of mass wasting. A recent study suggests that these processes may be responsible for up to 50 percent of bluff retreat in some cases. Investigators on the Shore Erosion Study have

indicated that on Lake Michigan slopes of approximately 21.8 degrees (2 1/2: 1), natural vegetation occurs and that vegetation can effectively control many mass wasting processes. The predominantly clayey soils on Lake Superior tend to be less stable. A generalized stable slope angle of three feet horizontal distance to one foot vertical distance (18.4°) has been suggested for regulatory purposes in Douglas County as a result of studies done by the Red Clay Project.

Estimating Recession Rates

Wave-induced erosion can be expressed in terms of an average annual recession rate. The Wisconsin Coastal Management program has measurements of recession rates in the form of a reconnaissance survey. Two types of recession rate data are available: (1) Long-term (approximately 100 years) which integrates periods of high and low erosion and thus reflects fluctuation of lake levels; (2) Short-term (1966-75) recession rates. The measurement points along the shoreline are generally closer together for short-term rates. Short-term rates are usually considerably higher than long-term rates because the short-term rates were measured during high lake levels when erosion is accelerated. In some instances short-term rates are lower. This may reflect the episodic nature of slope failure (a bluff which failed and is now temporarily stable) or the effects of structural protection.

In general it is preferable to use the long term rate as a measure of recession. In speaking of the variation over time in average retreat rates, a technical paper of the Corps of Engineers notes:

"Engineers are sometimes criticized for placing too much reliability in average retreat rates derived from a limited number of measurements widely spaced along the shore. However, the practicing engineer is interested in overall conditions affecting a large section of shore, and in long-term results affecting the lifetime of a project or structure (e.g., 30 years). It is worth pointing out that as the temporal scale increases some of the problems that originally contaminated data tend to cancel one another rather than accumulate as the time between observations is extended."

"A problem frequently faced by engineers is to choose a sampling interval adequate to determine a mean recess in rate for a given beach...It is well known that for a fixed level of long shore variability, the precision of the estimated regional mean can be improved by increasing the number of survey stations. Less well recognized is that inherent variability usually does not increase greatly with time. Thus, the probable error or mean rates and the percent error in mean recession tend to decrease with time. The variance of these estimates would also tend to decrease (thus, the precisions increase) in direct proportion between the number of years between surveys."

Source: Hands, Edward B. "Changes in Rates of Shore Retreat, Lake Michigan, 1967-76. Technical Paper No. 79-4, U. S. Army Corps of Engineers, p. 27-30

Determining the Recession Rate Setback

A recession rate setback distance can be established by multiplying the average annual recession rate by the assigned design life of the structure to be protected (e.g., 30 years, 50 years or 100 years for a residence). The selection of the appropriate regulatory time span during which buildings are to be protected from recession is a decision to be made by local policy makers in Wisconsin. The State of Michigan requires permanent structures to be set back the distance of the 30 year recession rate, but recommends that a greater setback is desirable. The Province of Ontario measures the 100 year recession rate and the stable slope angle.

"The 100-year erosion limit was established by extending inland from the edge of the bluff the average annual recession rate multiplied by 100 years, with an additional distance added on for a stable slope. To determine stable slopes, soil characteristics, stratigraphy, bluff height and observed stable bluff profiles were analyzed. As a result of this analysis, slopes of 2:1 and 3:1 were most frequently used." (A Guide For The Use Of Canada/Ontario Great Lakes Flood and Erosion Prone Area Mapping, Ministry of Natural Resources, Ontario, March, 1978, p 16)

A 50 year rate appears to be a reasonable minimum figure, since it approximates the useful life of a typical residence. To illustrate, assuming a 50 year design life and a long term recession rate of 2 feet per year; regulated structures would have to be set back 100 feet from the ordinary high watermark. The recession rates shown in the Technical Report Appendices and Erosion Hazard Maps should be considered as a general guide for determining the recession rate in a given area. In areas with highly variable recession rates or where structures have accelerated erosion, it may be necessary to make additional studies or to determine the recession rate at the particular site when development is proposed.

Determining the Stable Slope Setback

Structures, such as residences, that would be damaged by slope failure can be protected by requiring them to be located outside of unstable slope areas. This determination can be made by applying general rules to a specific site. Here is an example of the way it would work. Assume a bluff is 50 feet high. An angle of 21.8° (2 1/2 feet horizontal distance to 1 foot vertical distance) is measured from the ordinary high watermark. The point at which this angle intersects the bluff is the edge of the stable slope. This means that the stable slope setback would be 2.5 feet (stable slope angle) x 50 feet (bluff height) or 125 feet from the ordinary high watermark.

Establishing The Erosion Hazard Setback

These computations of recession rate and stable slope angle can be used to establish an erosion hazard setback in a zoning ordinance. Within this setback line high value structures which would be severely damaged by erosion

or activities which would accelerate erosion can be regulated. Using our previous examples, in an ordinance that required a 50 year period for protection against recession the erosion hazard setback would be 100 feet from the ordinary high watermark for a beach area with a 2 foot per year recession rate. Assume there is another area with the same recession rate but which also has a 50 foot high bluff. Here the erosion hazard setback would be the stable slope setback (50 ft. x 2.5 ft.) = 125 feet plus the recession rate setback of 100 feet or a 225 foot erosion hazard setback line.

The erosion hazard setback can be modified if the landowner provides technical data proving that a different recession rate is warranted, slope conditions are more stable than assumed, or that the erosion hazard, although correctly estimated, can be mitigated by structural protection.

REDUCING THE EROSION HAZARD

The basic causes of shoreline erosion, i.e., wave erosion, unstable slopes and surface erosion, can be reduced in some instances by protecting the shoreline from waves, stabilizing slopes, and controlling surface erosion.

Protecting The Shoreline From Waves

There are two primary methods for structural protection against waves. The first method directly armors the shoreline against wave attack through the use of revetments, bulkheads or similar structures. Revetments are sloping rock or concrete structures placed parallel to the shoreline to protect against wave action. Bulkheads are vertical walls with their base well below the lake level, whose primary purpose is to prevent the sliding of earth or slope failure with a secondary purpose of protecting against wave action. The second method

of protecting against waves is to build a protective beach by promoting beach accretion and retarding beach erosion. This method involves the use of nearshore breakwaters or groins.

For structures placed above the ordinary high water mark the regulatory jurisdiction lies primarily with local government. In the case of structures extending below the ordinary high water mark, local government can exercise concurrent jurisdiction with the Wisconsin Department of Natural Resources and the U. S. Army Corps of Engineers.

Further information about these methods of structural shore position is contained in the publications Great Lakes Shore Erosion Protection: A General Review with Case Studies; Great Lakes Shore Protection: Structural Design Examples, both available from the Wisconsin Coastal Management Program; and Help Yourself -- a pamphlet discussing erosion problems and alternative methods of shore protection, and the three volume Shore Protection Manual, an engineering handbook -- both available from the North Central Division of the U. S. Army Corps of Engineers. A few general comments about shore protection measures are warranted, however. Improperly designed, installed or maintained protective works are a waste of money and may have adverse off-site effects. Most classes of protective works are expensive. The effective life of a structure is generally reflected in its construction cost. "Careful site analysis and design must precede the placement of all structural devices, and even then the 'success' is measured in terms of a few decades. Without proper engineering and maintenance, structural failure can be expected at an even earlier point. Virtually all emergency structures and many low cost

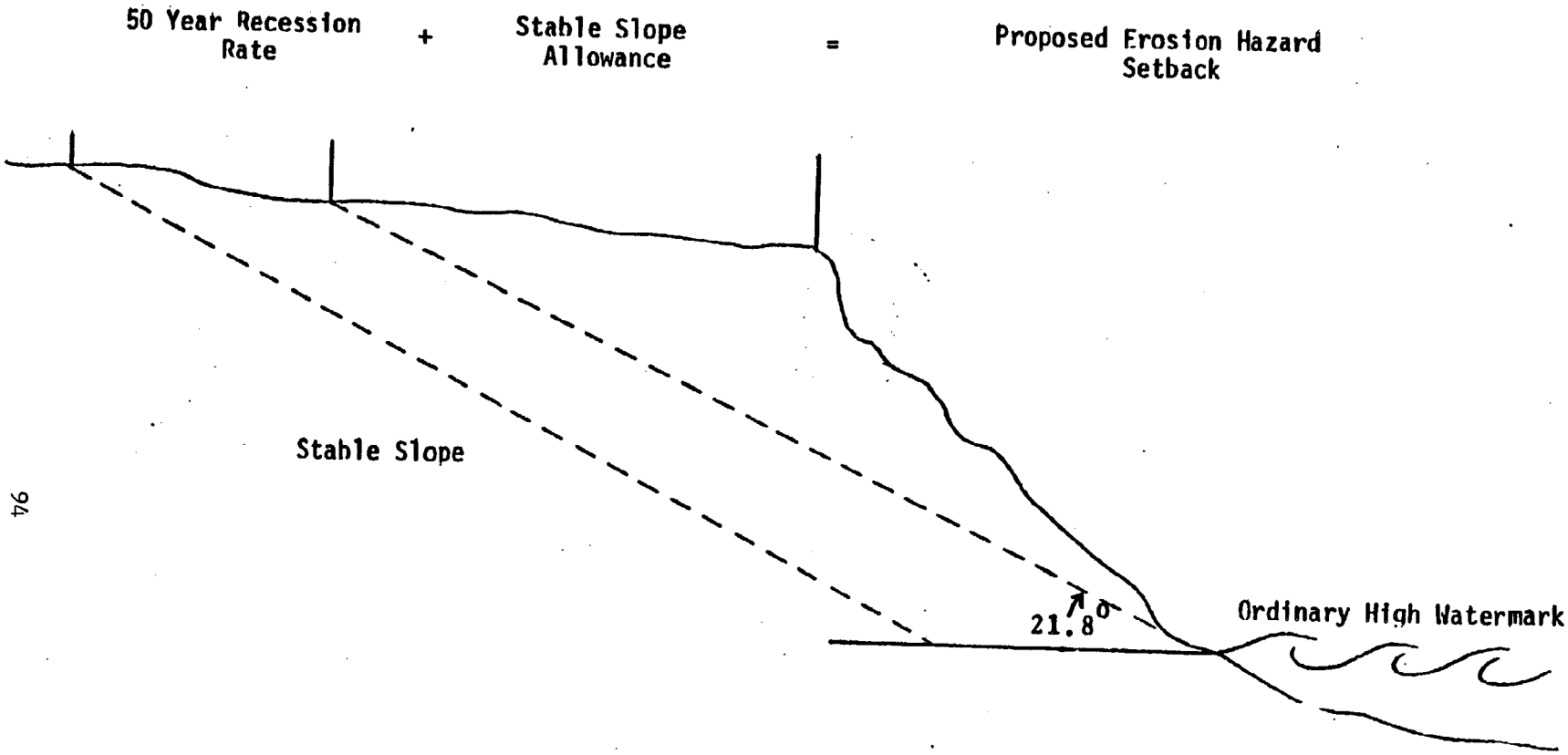
50 Year Recession Rate
+
Stable Slope Allowance
=
Proposed Erosion Hazard Setback
Stable Slope
21.8°
Ordinary High Watermark

structures (those under $100 per lineal foot) do not last beyond ten years." [Wisconsin Shore Erosion Plan p. 25] The chances for an effective structural approach are enhanced if a group of lot owners join together to build protective devices that are compatible and complement one another. For example, revetments and bulkheads constructed along a reach of shoreline which is exposed to wave attack may be subject to erosion (flanking) at either end of the structure. It may be difficult to secure both ends of the structure against flanking where the property involved constitutes only part of the reach subject to wave approach from a given direction.

Bluff Stabilization and Surface Erosion Control

It is virtually impossible to stabilize a bluff unless the base of the bluff has been protected against wave attack. However, once this has been done several methods of bluff stabilization are available. These methods include reshaping the bluff to a stable angle, mechanically terracing the bluff face through retaining walls, increasing the strength of the soil by removing excess groundwater, and controlling runoff over the top of the bluff. They are usually employed in combination. The most common method is regrading the bluff to a stable slope and constructing a rip-rap revetment at the toe, but different procedures may be required depending upon the particular situation. The publication Harmony With The Lake: Guide To Bluff Stabilization suggests the following stabilization measures be taken as necessary in the following order of priority: (1) When necessary, and if possible, reshape the bluff face to a stable angle of slope; (2) Control any excessive surface

water runoff; (3) Control any excessive groundwater seepage; (4) Revegetate the bluff face as necessary.

Vegetation is important in surface erosion control because it protects the soil from the impact of rain, slows runoff, acts as a filter to catch sediment, and helps hold soil particles in place. Grasses and low-growing shrubs are preferred when establishing a vegetative cover. They provide protection soon after growth begins, form a denser root mat, and do not tend to loosen soil around the roots as would occur with tree roots during wind storms. The presence of vegetation, especially trees and shrubs, may be a general indicator that the bluff is stable at the present time, i.e., the toe is not undercut and the slope is at a stable angle of repose. It does not mean that continued erosion will not occur in the future.

INCREASING THE EROSION HAZARD

As previously indicated, structural attempts to control shore erosion may increase erosion of nearby properties. Improperly managed storm water may also increase erosion. During periods of heavy rainfall, surface water flows over the top of the bluff and can erode the entire face of the bluff. Development which increases runoff by creating impervious surfaces, concentrating runoff, or destroying vegetation, accelerates this erosion. A bluff may also fail because of the added weight of buildings, swimming pools, and other heavy structures placed too close to the bluff top. Septic tank sewerage systems add weight, and the liquid effluent can reduce friction between soil particles causing unstable bluff material to slump and slide toward the beach.

ADJUSTING LAND USE TO THE EROSION HAZARD

Types of Land Uses and Development Patterns

The damages that will result from shoreline erosion depend upon both the severity of the erosion hazard and the type of land use that will be affected. As the shoreline continues to erode, the land will eventually be lost but the major portion of the damage comes from destruction of structures on the land. Open space land uses such as agriculture, forestry and parks may be the most appropriate land use in many erosion hazard areas, other things being equal. However, some facilities such as marinas, water intakes, sewage treatment plants, ports, and certain industries may require a location in the immediate shoreline area. For these shoreline dependent uses careful siting to avoid high hazard erosion areas and well designed erosion mitigation measures are important to avoid unnecessary damage. In the main, these uses are ones for which it may be economically feasible to provide effective structural protection. An investigator of shoreline erosion in Southeastern Wisconsin, commenting on structural erosion protective measures, notes "For the most part, the successful structures observed were built either by units of government or, to a lesser extent, by industry. These structures are massive, well engineered and constructed, and probably much too expensive to be justified for even the most valuable residential properties." (Shoreline Erosion In Southeastern Wisconsin, David W. Hadley, Wisconsin Geological and Natural History Survey, 1976, Special Report Number 5, p. 27.)

It is up to the comprehensive land use planning and zoning process to allocate lands to their most appropriate use. In this discussion we assume

that the proposed use is appropriate. The focus here is on ensuring that the use is developed in a manner consistent with the erosion hazard through the use of land use controls. Special erosion hazard provisions for a zoning ordinance and a subdivision regulation ordinance are presented in Part II to illustrate how this may be accomplished.

Since regulations generally apply only to new development, the effectiveness of regulations depends upon the existing land use development and ownership patterns. These patterns vary widely but may be characterized by the following general categories: (1) Rural areas where the land consists of large tracts of open space use in single ownership, e.g., farms and forests; (2) Rural areas where the land has been divided into smaller tracts through subdivision plats or sale of individual lots but is not yet developed or only partially developed; (3) Suburban areas where the land has been substantially developed along the immediate shoreline and development consists of infilling, i.e., construction on the undeveloped shoreline lots; (4) Developed areas where the first tier of lots has been largely built upon and development is occurring within the second tier of lots within an area still subject to erosion; and (5) Urban areas where almost the entire shoreline is developed in depth. (In general, regulations have their best potential in relatively undeveloped areas.)

Developed Areas

Lots already occupied by buildings are largely beyond the scope of regulations. The only appropriate regulatory provisions are those designed to

control activities which would accelerate erosion or which control the expansion of structures subject to damage. The owner of an existing structure subject to substantial erosion damage has two basic options: (1) attempt to mitigate the erosion hazard by protecting against wave erosion and stabilizing the slope or (2) relocate the structure. Permanent relocation outside the erosion hazard area could mean moving the structure to the rear of the same parcel if the lot is of sufficient depth, or moving it to a different lot not subject to erosion. "Relocation is an alternative that cannot be overemphasized. Erosion is a natural geologic process that is extremely difficult to stop. The alternatives to build shore protection or to relocate must be weighed against the consequence of failure. Depending upon the type of structure you might consider, it may cost the same to relocate as it would to build shore protection. Should a protective structure fail, then your investment in the structure is lost and your home or cottage still in danger." [Help Yourself, U. S. Army Corps of Engineers, North Central Division. p. 14]

A number of factors affect the cost of relocation. "They include lot depth, the availability of new building sites, ease of site access, building configuration and size, amont of subfloor access, number of public utility disconnections, and the availability of experienced movers. Because relocation is typically only considered during emergency periods, the amount of land lakeward of a building is a critical factor. Between 15 to 20 feet of clearance is normally required for safe operation of equipment. Moving costs of a small cabin or cottage, medium size ranch style house, and large mansion

can be expected to range between $3,000-$4,000, $7,000-$9,000, and $30,000-$40,000, respectively. These costs do not include site preparation costs at the new location." (Note: 1979 cost estimates) [Wisconsin's Shore Erosion Plan. p.87]

In cases of individual hardship where lots are too shallow to permit construction meeting the erosion hazard setback, it may sometimes be reasonable to permit a moveable structure such as a mobile home or residence designed so that it can be readily relocated. Allowing such structures within the setback line should be done only on a case by case basis after a careful investigation of the particular situation. Appropriate conditions should be attached to development permission in these instances.

Undeveloped Areas

On lots of adequate depth the most satisfactory approach is to properly locate the structure in the first place. This means that structures should be safely set back from erosion hazard areas. The setback should be based upon a consideration of the recession rate, in all cases, and a stable slope angle in the case of erodible bluffs. The setback approach is preferable largely because of the limitations of structural attempts from both a private and public point of view. Among these limitations are: (1) Attempts to adequately protect against waves may not be feasible from an engineering point of view, e.g., effective protection may require stabilization of a coastal reach which is longer than the site in question; (2) Structural measures are usually too costly in relation to the value of the land proposed to be pro-

tected. 1977 figures for approximate cost ranges per lineal foot of protected shoreline are as follows: temporary devices (less than 5 years expected life) $50-$100, intermediate life devices (5-25 years) $100-$200, and "permanent" devices (25-50 years) above $200. The actual life of a structure depends upon proper design, construction and maintenance [Great Lakes Shore Erosion Protection: Structural Design Examples, p. 5]; (3) Structural measures may have adverse off-site effects. Groins may cause accelerated erosion by starving down drift beaches. Shore armorment may deflect waves which erode adjoining property; (4) The form of shore protection most commonly used by individual property owners is loose dumping of stone or concrete rubble. This practice affords only short term protection. Besides destroying the natural beauty of the shoreline, this material often ends up on the bed of the lake, impairing the public rights in navigable waters.

REGULATIONS TO ADJUST LAND USE TO EROSION HAZARD

Zoning and Subdivision Regulations

Zoning ordinances and subdivision regulations are important tools that local government can use to require that new land uses take erosion hazard into account. Subdivision regulations and zoning complement each other. Zoning focuses primarily on the uses of land, the dimension of lots, and the location of structures on the lot. Lot dimensions are important to ensure the lot is deep enough to permit structures to be safely located behind the required erosion hazard setback line. Zoning can also control grading, filling, vegetative removal, installation of protective devices

and other activities that may accelerate erosion. Thus activities can be made conditional uses to require that they be undertaken in a manner that avoids adverse effects.

Subdivision regulations focus on the process of dividing larger tracts of land into lots for purposes of sale or building. For undeveloped areas which have not been divided into lots, subdivision regulations have particular promise. The larger size of the parcel involved makes it more likely that economically feasible engineering solutions can be found to storm water management, grading and filling and erosion protection measures. Subdividers can be required to designate erosion hazard areas on the plat, and restrict this area to park or open space for the use of the residents of the subdivision.

Status of Zoning and Subdivision Regulations Along the Coast

All Wisconsin coastal counties have adopted shoreland regulations which include zoning ordinances and subdivision regulations which apply to the unincorporated portions of the Great Lake shorelands. [Milwaukee County does not contain any unincorporated areas.] County shoreland regulations were designed primarily for inland lakes and most do not take into account the special erosion hazards of the Great Lakes. [Exceptions are Douglas, Ozaukee and Racine Counties.] All of Wisconsin's 33 coastal cities and all but two of its villages have zoning ordinances. Twenty-five of the coastal municipalities have also adopted subdivision regulations. Most municipal regulations do not contain special provisions for coastal erosion hazard areas.

Sample erosion hazard provisions for zoning ordinances and subdivision regulations are contained in Part II. The general approach suggested in these provisions is to: identify erosion hazard areas; restrict or prohibit uses which are vulnerable to erosion damage or which may impair public rights in navigable waters; require special review of erosion protection devices to ensure that they are properly designed, installed and maintained; and regulate land disturbance, storm drainage and other activities which may increase erosion. Erosion hazard regulations which restrict the use of private property must meet certain basic constitutional tests or they may be found invalid by a court. These legal tests provide guidelines for drafting and administering erosion hazard regulations.

CONSTITUTIONAL CONSIDERATIONS IN SELECTING REGULATORY POLICIES

General Tests of Validity

Regulations which restrict the right to use private property will usually be found constitutionally valid if they meet the following basic conditions:

(1) The regulations serve valid public objectives which promote public health, safety and general welfare.

(2) The regulatory provisions are a reasonable means to achieve these objectives.

(3) There is a reasonable basis for the classification of uses and lands subject to the regulations.

(4) The property owner is left with some reasonable use (usually framed in economic terms) of the property, i.e., there is no taking of property without compensation.

(5) The ordinance provides sufficient standards to prevent the arbitrary exercise of power by administering agencies in reviewing conditional uses and in other discretionary activities.

Zoning regulations are presumed to be valid but this presumption may be rebutted by evidence provided by persons contesting the validity of the regulations. The importance of the particular facts in each case has been emphasized. "However, each case in which the validity of such regulations is challenged, must be determined on the facts that are directly applicable to the property of the parties complaining." Kmiec v. Town of Spider Lake (Wis. 1974) 211 NW2d 471, 477. As a consequence, in most instances the court determines the validity of the regulations only as they apply to the particular property in question. Landowners typically challenge the validity of zoning where their land is zoned differently from nearby lands and the zoning prohibits a use which would permit a higher economic return than the use to which it is restricted. In Kmiec the Wisconsin court invalidated the application of agricultural zoning to the particular lakeshore property in question on two grounds: (1) The parcel was improperly mapped, i.e., the classification was without a reasonable basis; and (2) the classification resulted in a substantial negative value of the land.

Erosion hazard regulations which severely restrict the use of private property on the basis of generally delineated erosion hazard areas may be

particularly subject to challenge on the grounds of "taking, i.e., the restrictions permit no reasonable use of the property; and improper classification, i.e., the area is not subject to severe erosion or the estimated erosion hazard has been incorrectly "mapped".

The possibility of challenge to erosion hazard regulations makes it important to carefully review legal precedents which validate reasonable erosion hazard regulations.

SUMMARIES OF WORKSHOP DISCUSSION GROUPS

PROBLEM IDENTIFICATION & ASSESSMENT

1. The group concurred with the state-of-the art paper on the causes and mechanics of bluff slumping. They made the following specific findings and recommendations in this regard, viz.:

   a) The information in the state-of-the art papers should be converted to user-oriented guidelines and released in the form of pamphlets or leaflets.

   b) The public should be made aware of the futility of low-cost solutions without adequate problem identification and assessment.

   c) Coastal slope failures frequently involve both terrestrial and marine processes of degradation often in complex interaction with one another.

   d) As a result of (c) above successful systems to protect coastal bluffs must combine a shoreline defense against wave action along with protection against slope failures in the backshore slope area.

2. Some important distinctions were noted between two major approaches to identification and assessment of slope stability problems in the coastal zone, viz.:

   a) Reach specific vs. site specific studies

   b) Long term vs. short term analysis

   c) Management (zoning) vs. engineering (structural) solutions.

3. Different constituencies are interested in different approaches listed in #2 above. Government agencies and planning bodies tend to be interested in the reach (long-term management) approach while property owners prefer site specific (short-term structural) solutions.

4. The group perceived a need to develop improved coastline hazard or zonation maps for slope degradation processes. This zonation mapping involves the following key steps:

   a) Collection of data and preparation of basic data maps

   b) Development and implementation of decision models.

   c) Preparation of zonation or use suitability maps.

These steps are schematically illustrated in Figure 1. Item (a) above could be done by technicians and trained volunteers, (b) by scientists and engineers, and (c) by multidisciplinary teams from the public sector (e.g., state resource agencies, U.S. Corps of Engineers, U.S. Geological Survey).

5. These are technical, economic, and political problems with a major project of coastline zonation or hazard mapping. These include:

   a) Public acceptance. Can the negative connotations of "hazard" or "risk" maps be avoided by making slope evolution maps or "remedial action" maps which focus on positive action to reduce damages along particular reaches of shoreline?

   b) Reliability of decision models. Long term data to calibrate various models may be lacking.

   c) Cost. The public must be convinced of the benefit of such a mapping program. The loss mitigation made possible by such analysis (either by avoidance or by pinpointing effective correction action) must be demonstrated. Put another way, the cost of such a program must be shown to be a small fraction of the cost of failing to implement it.

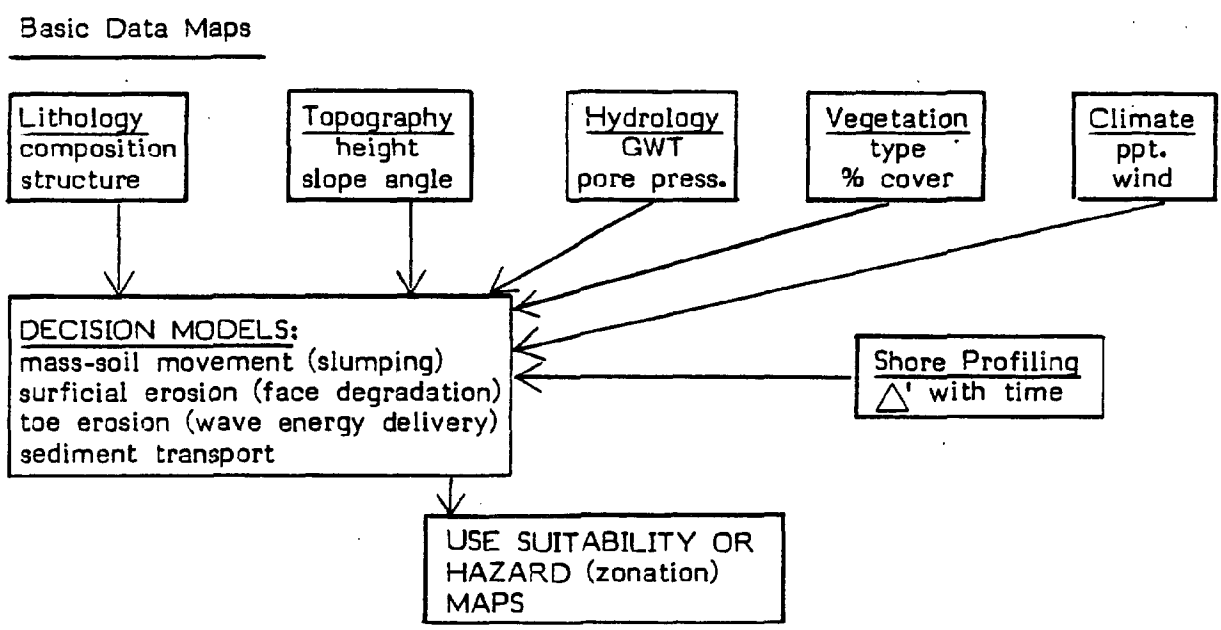

FIG. 1: Schematic illustration of steps for preparation of zonation or hazard maps in the coastal zone.

6. The group concurred that many bluff stability problems particularly those involving slumping in high bluffs in cohesive sediments can only be understood and described properly in long-term time frames. This requires that funding for such studies be long term and sustained.

CONTROLLING FACTORS

1. Bluff Lithology: Many (or most) bluffs in the Great Lakes are comprised of two or more stratigraphic units which often include cohesive and noncohesive units in a single profile. This carries significant implications for bluff modelling research.

2. Geomorphic Monitoring: There is a need to differentiate between bluff erosion and retreat and between retreat based on crest recression and toe recession. This also relates to low angle and high angle failure and the net loss of bluff material in cohesive and noncohesive lithologies; further, the optimum frequencies of aerial overflights may be different for different bluff types.

3. Beach Sediment Budget: Most littoral sediment in the Great Lakes originates from bluff erosion and the body of beach sediment (in transit material) is an important control on wave erosion of bluffs; bluff retreat in many cases can be related to beach sediment budgets over different time frames.

4. Bluff Recession Models: Slope profiles of bluff retreat appear to vary with different lithologies; sandy bluffs appear to show high seasonal variation in morphology whereas clayey bluffs appear to show greatest morphological variabilities over longer time frames. In general, slopes are gentler during low lake level periods and steeper during high lake level periods. Shallow failures are more common during high lake levels. Deeper seated failures are more common during low lake level periods.

5. Offshore Erosion: Bluff retreat over the long term may not only be related to recent forces and processes but to offshore (remnant) features such as residual boulder fields; such fields have been tied to "hard points" along retreating coast lines.

6. Climatic Effects: The influence of snowbelts on coastal hydrology and bluff retreat is largely unknown. On cohesive bluffs, there seems to be little activity in winter. In spring, the primary loss is by mud flows and other bluff face activities. In fall, most loss is due to sheet loss and rill erosion. Toe erosion is greatest in spring and in fall during periods of high wave energy. Wind erosion is the most common erosion process in winter.

7. Wave Forces: Wave growth on the Great Lakes appear to be much larger than ocean-based forecasting models would indicate. This is apparently related to the high intensity of atmospheric instability over the lakes in the fall and winter. Sediment movement initiated by storm wave events appears to last much longer than the wave event itself.

MITIGATION MEASURES

1. Non-structural mitigation measures

   a) Non-structural methods only work in undeveloped areas where you can control land use (excluding relocation of houses).

   b) Michigan, Wisconsin, and Illinois approach is to encourage setback requirements. (Wisconsin's program is voluntary allowing for use of recession rates, slope stability, and/or combination of these).

   c) Various interest groups have different views regarding disclosure of erosion/bluff slumping hazards. For example, interest has been shown by property assessors, banks, and realtors representing prospective buyers, vs. realtors representing sellers). Property owners, realtors, and banks should be made aware of erosion bluff hazards.

   d) Property owners should be made aware of federal insurance assistance policy. Increased public awareness is needed that under existing federal insurance laws losses from erosion are not covered. Any changes in insurance laws should discourage property owners from building in high risk zones.

   e) There are different approaches for calculating bluff hazard setbacks. Some states use historic recession rates, others include slope stability, and site-by-site review. The traditional method uses recession rates, but more emphasis should be placed on the stable slope angle. Manitowoc and Ozaukee, counties in Wisconsin have recently incorporated both.

   f) Most programs allow for reduced setbacks with either toe protection or movable structures (homes).

   g) While there is disagreement, the scientific basis for establishing erosion hazards is generally agreed upon.

2. Bottom and beach formation

   a) Shore protection methods that are of moderate cost, replaceable, small-scale, and work with natural forces should be tested further. The public should be made aware of these types of devices.

   b) Artificial nourishment of groin system provides immediate benefit for shore protection.

3. Toe Protection

a) Armoring the shoreline is not always the answer because these are site specific problems.

b) There is no such thing as low-cost, as in cheap, bluff protection. The public should be made aware of this.

c) Property owners should be made aware that any shore protection requires periodic inspection and maintenance.

d) Within the framework of general site criteria a list of certain devices can be suggested. However, property owners should be made aware of the site-specific nature of their effectiveness.

e) Need better scientific documentation of many devices now marketed and developed. Many have short history, weathered few storms (need monitoring and bathymetry).

f) Cost of structure must be weighed against durability.

4. Drainage

a) Subsurface Drainage

-Dewatering of bluffs with a deep dewatering problem is only viable on highly valuable land due to the high cost and limited zone of effectiveness of each well.
-Problem with dewatering bluffs is inconsistency of bluff materials between bluffs and within bluffs.
-Drainage techniques include chimney drains, curtain drains, and eductor wells.
-Chimney drains must be done in conjunction with toe protection and may also require slope grading to the stable angle of repose.
-The difficulty in dewatering bluffs is due mainly to depth of water, source of water, (e.g. aquifers, septic systems, etc.).
-Almost impossible to drain pure clay slope.
-Curtain drains only handle shallow dewatering problems. Deep draining is done with eductor well.

b) Surface Drainage

-Problems associated with surface drainage include freezing and bursting of pipes that transport water.
-Curtain drains are also a device for surface drainage.
-Surface drainage is the easiest problem to control.
-Vegetation is very effective on surface runoff and small seeps.

5. Modification of Slope Profile

   a) Group did not discuss methods of grading slope, terracing, or fills.

   b) Most property owners do not want their property cut to a 2:1 angle and it can also be very expensive.

6. Revegetation

   a) It was felt that vegetation was only effective in controlling surface drainage and small seeps.

   b) Revegetation should be conducted after other mitigation has stabilized slope.

7. Combined Approaches

   a) Public awareness of effects of on-site septic systems on both subsurface and surface drainage is needed.

   b) Need to look at all problems - controlling wave action and groundwater before initiating mitigation methods.

   c) Community action to reduce bluff slumping is desirable. Property owners should be encouraged to work with their neighbors on shore protection, thus benefiting from economies of scale and increased effectiveness and durability.

RESEARCH NEEDS

A. General

Each discussion group formulated a list of research needs. These needs were discussed in a plenary session. There was considerable overlap between the lists of each group; accordingly they have been consolidated and are presented in a single section.

No attempt is made herein to assign priorities to these research needs. It was generally recognized, however, that research funding in the foreseeable future would be quite limited. Maximum emphasis should be placed, therefore, on data collection and monitoring using local resources and trained volunteers. The Coastwatch Program in Racine, Wisconsin was cited as an example of this approach.

Problems amenable to individual solution have already been handled. Challenges remaining in research are multidisciplinary requiring a team approach.

B. Research Items

1. Slope evolution models. Slope evolution models for coastal bluffs should be developed and refined. One or two general models of bluff erosion and retreat are not meaningful for the Great Lakes as a whole. Instead, models should be developed based on specific analysis of geomorphic processes and temporal trends on a reach basis.

2. Causal factors. Improved understanding of "lake" variables (wave events, lake or water level changes, longshore transport, sediment transport, sediment sources, foot ice, off-shore topography, and off-shore topography) individually and in various combinations is necessary to better understand the primary causes of bluff failure and erosion. This information would be helpful in developing slope evolution models and in forecasting bluff retreat at different sites.

3. Bathymetry Studies. We currently lack extensive or detailed data on the nearshore zone. Most of the data gathering and monitoring has focused on the beach, backshore slopes, and offshore deep zones. Bathymetry studies could provide much of the needed information cited under "lake" variables in item #2.

4. Relative importance and significance of coastal slope processes. Major types of slope processes include deep slumping, shallow translational slides or flows, and surficial erosion (rilling/sheet wash). We need to get a better idea of the relative importance of these different processes in terms of:

   a) volumes of degraded materials

   b) rates of bluff recession attributable to each

   c damages to property and threat to lives.

5. Episodic nature of coastal slope erosion and retreat. The magnitude and frequency of episodes of bluff erosion and retreat are incompletely understood. Moreover, the magnitude and frequency of these events may vary with different bluff types, based on their lithology, morphology, ground water, location, etc.... The issue is further complicated by:

   a) combinations of causal factors such as high intensity and frequent storms coupled with weak foot ice along the shore.

   b) delayed response of bluff failure (particularly high clay bluffs) to certain driving forces such as storms and high lake levels.

6. Nature of bluff slumping in the coastal zone. The following aspects of bluff slumping in high, clay till bluffs are poorly or incompletely understood:

   a) Where and when do large slumps occur? These are usually one of two types; both are likely to be destructive. The first type degenerates into a fast moving flow or slide which generates offshore debris and damages offshore protective structures. The second is a slow moving, deeper seated type which destroys property atop the bluff to a considerable distance behind the bluff face.

   b) What is the role and significance of progessive failure and strain softening that initiates at the toe of bluffs composed of lacustrine clays and water laid tills?

   c) Can potential failure surfaces (e.g., weathered zones, highly sheared bands) be identified and located in clay till bluffs?

   d) How extensive and significant are fractured tills in coastal bluffs?

7. Mitigation. Approximately 70% of the eroding shoreline along the Great Lakes is in private ownership. Accordingly, materials should be developed to help property owners analyze their bluff stability problem and provide information on integrated solutions to their problems (i.e., solutions that encompass both terrestrial and marine processes). In particular, guidelines should be developed which outline:

   a) Measures which property owners can implement themselves (e.g., traffic, vegetation, and water management) vs. measures which require advice and services of trained professionals (e.g., subsurface drainage installations and protective structures.)

   b) Combined approaches to bluff protection including simultaneous use of vegetation, structures, grading, beach fills, and drainage systems.

   c) Setback requirements along specific reaches of shoreline.

Continued monitoring and evaluation are also required on the long term effectiveness and performance of low-cost shore protection systems which have been installed at various sites as demonstration projects.

PUBLIC DISSEMINATION

A. General - The workshop participants were asked to identify priority areas for information dissemination to the public on bluff slumping problems and to suggest possible vehicles for such dissemination. The resulting list of items was culled from both small group discussion and a general discussion in plenary session.

A number of difficulties were noted at the outset of such an information transfer program. These included but are not limited to the following observations:

1. Many people are not particularly concerned about the problem until it affects them directly and acutely. By then it may be too late to do anything, or available options may be severely limited.

2. The consciousness threshhold tends to fluctuate with lake levels. Periods of low lake level may be the best time to initiate remedial action, but people are less worried then and less inclined to take action. This underscores a need for continuous education and publicity about the problem

3. The information needs of different constituencies vary in their technical content and format. The level and type of information desired by property owners most likely will differ from that required by a consultant engineer, contractor, or public agency official. This suggests a need for different levels of publications which address different needs and concerns.

4. Making these various constituencies aware of sources and availability of information can be a problem. In many cases shore property owners live elsewhere (e.g., Chicago and Detroit) and are only part-time residents.

B. Format for Dissemination - A number of different methods for dissemination were discussed including pamphlets, fold out brochures, slide shows, fact sheets, handbooks, reports, annotated bibliographies, and short courses. There was some concensus that the best format for a public information document was a brochure or small handbook.

A revised and updated version of the Illinois fold out brochure (Illinois CZM, 1979) was cited as a possibility. The general feeling was that a revised brochure or handbook should present an overview of the causes of bluff slumping; outline procedures for correct identification and assessment of the problem at a specific site, provide general guidelines for solving the problem, and cite sources of additional information and/or assistance.

C. Content of Public Information Document. - In addition to the above suggestions for organization and focus of the publication, a number of specific recommendations about content were also made. These include the following:

1. A section should be included with a flow chart or checklist that takes property owners through a step-by-step analysis of their particular bluff problem. One suggestion was made that such a checklist be modelled on the one found at the beginning of the coastal zone vegetation guidebook. Another suggested that the home owner identify his particular bluff type based on the Michigan Lake Shore Classification System (MSU Resource Development, 1958) which in turn would describe the slope process most likely to affect that particular bluff type and the range of remedial measures that might be considered.

2. The publication should tell property owners when they need to call in experts and who these experts are. In addition the publication should inform the owner what measures he can implement himself at relatively little coast. These measures tend to fall in the general category of "management" action, viz.:

   a) Traffic Management - routing and channeling of vehicular and pedestrian traffic from vulnerable slopes by use of sign posts, barriers, stairs, etc.

   b) Water Management - minimizing infiltration and runoff into bluff area from lawn watering, drain fields, roof gutters, road ditches, etc.

   c) Vegetation Management - maintaining woody shrubs and trees on critical slopes. Planting dune grass and suitable herbaceous cover on sandy slopes.

Lakeshore Classification Map and Shoretype Bulletin, #1-28, (1958). Michigan State University, Department of Resource Development, Agric. Exp. Stn., East Lansing, Mich. (1958).

3. The publication should describe warning signs or tell-tale indicators of an impending slope failure or continuing stability problem in coastal bluffs. These could include:

   a) vegetative indicators - bare slopes, incongruent vegetation, phreatophyte plants growing on the slope, displaced vegetation.

   b) hydrologic indicators - springs or seeps in the face of the bluffs, presence of rills or gullies, perched ground water tables.

   c) morphological indicators - presence of scarps, cracks, depressions; uneven or broken slopes; alluvial fans at the base of slopes.

   d) lithological indicators - weak or erodible material exposed at the toe of bluff, lack of protective beach.

WORKSHOP ATTENDEES

WORKSHOP ATTENDEES

Gary L. Boyd
Dept. of Fisheries & Oceans
867 Lakeshore Dr.
P.O. Box 5050
Burlington, Ontario, Canada L7R 4A6

Robert M. Quigley
Faculty of Engineering Science
Univ. of Western Ontario
London, Ontario, Canada N6A 5B9

A. J. Zemen
Shore Processes Sec., Hydraulics Div.
NWRI Can. Cen. for Inland Waters
P.O. Box 5050
Burlington, Ontario, Canada L7R 4A6

John G. Housley
HQ USACE (DAEN-CWP-F)
U.S. Army Corp. of Engineers
Washington, D.C. 20314

Norm Wingard
ESAO-USGS
720 National Center
Reston, VA 22092

Dennis Markle, WESHH
U.S. Army Engineer
Waterway Experiment Station
P.O. Box 631
Vicksburg, MS 31980

Gerald Mitchell, WESGE
U.S. Army Engin. Waterway Exper. Sta.
P.O. Box 631
Vicksburg, MS 31980

Frank Neilson, WESHI
U.S. Army Engin. Waterway Exper. Sta.
P.O. Box 631
Vicksburg, MS 31980

Lawson Smith, WESGR
U.S. Army Engin. Waterway Exper. Sta.
P.O. Box 631
Vicksburg, MS 31980

John Lyon
Dept. of Civil Engineering
470 Hitchcock Hall
Ohio State University
Columbus, OH 43210

William M. Marsh
Dept. of Resource & Comm. Science
University of Michigan - Flint
Flint, MI 48503

H. W. Belcher, P.E.
U.S.D.A. Soil Con. Services
1405 S. Harrison Rd.
East Lansing, MI 48823

Luis Vallejo
Dept. of Civil Engineering
147 Engineering Build.
Michigan State University
East Lansing, MI 48824

Thomas A. Coleman
Soils & Materials Section
Mich. Dept. of Transportation
P.O. Box 3005
Lansing, MI 48909

Martin R. Jannereth
Land Resource Programs
P.O. Box 30028
Lansing, MI 48909

Susan Prinz
335 Morris Ave., SE
Grand Rapids, MI 49503

John McKinney
Mich. Sea Grant Ext. Agent
Governmental Center
400 Boardman Avenue
Traverse City, MI 49684

Dr. Tuncer Edil
Dept. of Engineering
1415 Johnson Drive
Madison, WI 53706

Charles H. Carter
Div. of Geological Survey
P.O. Box 650
305 E. Shoreline Drive
Sandusky, OH 44870

Constantine N. Papadakis
Wolverine Tower, Suite 1014
3001 S. State St.
Ann Arbor, MI 48104

Charles L. Kureth, Jr.
The Traverse Group, Inc.
2480 Gale Road
Ann Arbor, MI 48105

Ernest Brater
Dept. of Civil Engineering
304 West Engineering
University of Michigan
Ann Arbor, MI 48109

Donald F. Eschman
Dept. of Geological Sciences
4010 CC Little Bldg.
University of Michigan
Ann Arbor, MI 48109

Donald Gray
Dept. of Civil Engineering
312 West Engineering
University of Michigan
Ann Arbor, MI 48109

Sandra Gregerman, Info. Officer
Michigan Sea Grant
2200 Bonisteel Blvd.
Ann Arbor, MI 48109

John H. Judd, Assist. Director
Michigan Sea Grant
2200 Bonisteel Blvd.
Ann Arbor, MI 48109

Guy Meadows
Dept. of Atmos. & Oceanic Sciences
2218 Space Res.
University of Michigan
Ann Arbor, MI 48109

David M. Mickelson
Dept. of Geology - Weeks Hall
University of Wisconsin
Madison, WI 53706

Douglas Yanggen
Land Use Specialist
1815 University Avenue
Madison, WI 53706

Edith KcKee
416 Maple Street
Winnetka, ILL 60093

Robert W. Fleming
Engin. Geological Br. M5903
U.S.G.S., Denver Fed. Center
Denver, CO 80225

J. Phillip Keillor
Sea Grant Institute
University of Wisconsin
1800 University Avenue
Madison, WI 53706

Suzanne Tainter
Communications Coordinator
Michigan Sea Grant
2200 Bonisteel Blvd.
Ann Arbor, MI 48109

Ellen Fisher
1815 University Avenue
University of Wisconsin
Madison, WI 53706

ADDITIONAL SOURCES OF INFORMATION

MORE READING

Armstrong, John M. 1976. **Low-cost Shore Protection on the Great Lakes: A Demonstration/Research Project.** Reprinted from Proceedings of the Fifteenth Coastal Engineering Conference. July 1976: 2858-2887. A study of low-cost (less than $100.00 per foot of shoreline) shore protection methods -- some well-known and some innovative -- on 19 sites in Michigan. Includes description of methods.

Berg, Richard C. and Charles Collison. 1976. **Bluff Erosion, Recession Rates, and Volumetric Losses on the Lake Michigan Shore in Illinois.** Illinois Geological Survey, Environmental Geology Notes. Number 16. Study of erosion, recession rates and volume losses on bluffs of Illinois Lake Michigan Shore; specific data. General conclusions about contributing factors.

Brater, E. F. and David Ponce-Campos. 1976. **Laboratory Investigation of Shore Erosion Processes.** Michigan Sea Grant Program Reprint. Reprinted from Proceedings of the Fifteenth Coastal Engineering Conference. July 1976: 1493-1511. A discussion of laboratory simulation models used in research on erosion and shore protection.

Buckley, W.R. & H. A. Wintus 1975. Rates of bluff recession at selected sites along the southeastern shore of Lake Michigan, Michigan Academican, Vol. 8, no 2. P.179-186 - (data for 1956-1973) interval for 7 of Powers (1952) sites.

Burke-Griffin, Barbara. 1979. **Racine County Coastwatch Program: Final Report.** County Planning and Zoning Department and Wisconsin Coastal Management Program. A report on a volunteer/public involvement program set up to monitor shore erosion. Primarily evaluates the program's effectiveness and specific problems. For further help on setting up a similar program see Gabriel.

Butler, Kent, Robert DeGroot, Mark Greenwood, and David Thomas. 1978. **Feasibility of Compensation for Man-Induced Shore Erosion.** Wisconsin Coastal Management Program Part I - Summary report: includes brief analysis of legal and administrative options for gaining erosion compensation (insurance, tax relief, legal actions), feasibility of relating human activities to erosion, options for the individual and the state. Part II - Legal options including theory, standing and evidence requirements Part III - Relation of human actions, such as lake level regulation, shore protection structures, upland land management, and navigation, to erosion.

Canada/Ontario Great Lakes 100-year Flood and Erosion Prone Area Maps. 1978. Public Information Center, Whitney Block, Queens Park, Toronto.

Canada/Ontario Great Lakes Erosion. **Monitoring Programe Final Report 1973-80.** 1981, G.L. Boyd, Dept. Fisheries & Oceans, Burlington, Ontario, Marine Information Centre, Bayfield Lab, Box 5050, Burlington ONT.

Canada/Ontario Great Lakes Shore-Damage Survey. **Coastal Zone Atlas, 1975.** Bayfield Lab., Box 5050, Burlington ONT.

Canada/Ontario Great Lakes Shore Processes and Protection - 1981 D. L. Strelchuck (ed), Ontario Ministry of Natural Resouces, Toronto Ontario, Public Information, Centre, Whitney Block, Queens Park, Toronto.

Canada/Ontario Great Lakes Shore Management Guide - 1981. D.L. Strelchuck (ed), Ontario Ministry Natural Resources, Toronto Ontario, Public Information Centre, Whitney Block, Queens Park Toronto.

Canada Centre for Inland Waters. 1980. **Proceedings: Second Workshop on Great Lakes Coastal Erosion and Sedimentation.** National Water Research Institute. N.A. Rukavina, Editor. Contains several valuable articles. Topic areas include sediment transport, coastal erosion, and beach and nearshore sedimentation as well as general papers.

Conservation Foundation. 1980. **Coastal Environmental Management: Guidelines for Conservation of Resources and Protection Against Storm Hazards.** John Clark, Project Director. Washington, D.C. Chapter 4 includes a brief discussion of slumping phenomena and 3 management policy recommendations: 1) alteration of bluff-top danger zones, 2) alteration of the slope, and 3) protection for the toes of bluffs.

Davis, Richard S., Jr. 1976. **Coastal Changes, Eastern Lake Michigan, 1970-73.** Coastal Engineering Research Center, U.S. Army Corps of Engineers, Fort Belvior, VA. Technical Paper No. 76-16. A study of erosion, of 17 sites on eastern Lake Michigan, 1920-1973. Includes description of morphology and processes, metreological data, methodology of study, beach and nearshore bottom profiles and sediment analysis.

Edil, Tuncer B. and B. J. Haas. 1980. **Proposed Criteria for Interpreting Stability of Lakeshore Bluffs.** Engineering Geology, 16: 97-110. Proposes two criteria for interpreting bluff stability: 1) critical circle (failure as a series of small slides) 2) unstable circle (critical circles that will fail together).

Edil, Tuncer B. and Luis E. Vallejo. 1980. **Mechanics of Coastal Landslides and the Influence of Slope Parameters.** University of Wisconsin Sea Grant Reprint. Reprinted from Engineering Geology 16: 83-96. An overview of the physical processes affecting slope stability and an application of stability analysis modeling to assess the influence of various slope parameters.

Edil, Tuncer B. and Luis E. Vallejo. 1976. **Shoreline Erosion and Landslides in the Great Lakes.** University of Wisconsin Sea Grant Program. Advisory Report No. 15. A study using field and laboratory investigations of six active bluffs to perform a stability analysis and establish models of slope evolution.

Edil, Tuncer B. 1980. **Control of Coastal Landslides.** Proceedings of the International Symposium on Landslides, Vol. 3, New Delhi, India. Describes the nature of coastal landslides and possible methods of control, primarily engineering solutions with only a brief mention of non-structural alternatives.

Edil, Tuncer B. and Luis E. Vallejo. 1976. **Shoreline Erosion and Landslides in the Great Lakes.** University of Wisconsin Sea Grant Program. Advisory Report No. 15. A study using field and laboratory investigations of six active bluffs to perform a stability analysis and establish models of slope evolution.

Edil, Tuncer B. 1980. **Control of Coastal Landslides.** Proceedings of the International Symposium on Landslides, Vol. 3, New Delhi, India. Describes the nature coastal landslides and possible methods of control, primarily engineering solutions with only a brief mention of non-structural alternatives.

Environment Canada. 1975. **Canada/Ontario Great Lakes Shore Damage Survey: Technical Report.** Includes methods and criteria of survey, causes of erosion, magnitudes of erosion (comparing different areas, and different techniques). Excellent product.

Environment Canada. 1975. **Canada/Ontario Great Lakes Shore Damage Survey: Technical Report.** Includes methods and criteria of survey, causes of erosion, magnitudes of erosion (comparing different areas, and different techniques). Excellent product.

Federal Insurance Administration. 1975. **Canada/Ontario Great Lakes Shore Damage Survey: Technical Report.** Includes methods and criteria of survey, causes of erosion, magnitudes of erosion (comparing different areas, and different techniques). Excellent product.

Federal Insurance Administration. 1977. **Proceedings of the National Conferences on Coastal Erosion.** Summaries of panel discussion, with a good bibliography. Primarily 1) erosion rate calculation methodologies, 2) critiques of methodologies, 3) policy implications.

Fisheries and Environment Canada/Ontario Ministry of Natural Resources. 1978. **A Guide for the Use of Canada/Ontario Great Lakes Flood and Erosion Prone Area Mapping.** A discussion of Canada's hazard mapping project - includes its uses, development, definitions, and criteria for determining areas of risk.

Flawn, Peter T. 1970. **Environmental Geology: Conservation, Land-Use Planning, and Resource Management.** Harper and Row, New York: A good source on general geologic processes, including mass movement and planning.

Federal Insurance Administration. 1977. **Proceedings of the National Conferences on Coastal Erosion.** Summaries of panel discussion, with a good bibliography. Primarily 1) erosion rate calculation methodologies, 2) critiques of methodologies, 3) policy implications.

Fisheries and Environment Canada/Ontario Ministry of Natural Resources. 1978. **A Guide for the Use of Canada/Ontario Great Lakes Flood and Erosion Prone Area Mapping.** A discussion of Canada's hazard mapping project - includes its uses, development, definitions, and criteria for determining areas of risk.

Flawn, Peter T. 1970. **Environmental Geology: Conservation, Land-Use Planning, and Resource Management.** Harper and Row, New York: A good source on general geologic processes, including mass movement and planning.

Fisheries and Environment Canada/Ontario Ministry of Natural Resources. **Shore Property Hazards.** A brochure for shore and property owners which includes a section on shore processes, a list of potential hazard indicators and descriptions of possible solutions. Also federal/provincial policy and programs.

Gabriel, Stephen R. 1980. **Implementing A Beachwatch and Sand Dune Development Program: A Community Handbook.** City of Ocean City, N.J. Excellent handbook of "how-to" for community involvement in monitoring and improving coastal hazard areas in New Jersey dunes/beach environment.

Gray, Donald H., Andrew T. Leiser and Charles A. White. 1980. **Combined vegetative-structural slope stabiliation.** Civil Engineering. January 1980. Brief descriptions of techniques for erosion control using both vegetative and structural components. Includes contour wattling, staking of willow cuttings, and conventional plantings used in conjunction with bench walls.

Gray, Donald H. and Andrew T. Leiser. **Biotechnical Slope Protection and Erosion.** Van Nostrand Reinhold Co. (in press). A book describing the use of vegetation and structures in combination to deal with slope and erosion problems.

Gray, Donald H. and Bruce H. Wilkinson. 1979. **Influence of Nearshore Till Lithology on Lateral Variations in Coastline Recession Rate, Along Southeastern Lake Michigan.** J. Great Lakes Resources, Int'l Association Great Lakes Res. 5(1):78-83. A discussion of the direct correlation between variations in shoreline recessing rates and lateral variations in nearshore till lithology along southeastern Lake Michigan.

Gray, Donald H. and Thomas M. Jopson. 1979. **Vegetative - Structural Slope Protection for Rehabilitation of Disturbed Areas in Redwood National Park.** Final Report to National Park Service, U.S. Department of Interior. Includes a section about using horizontal drains to deal with drainage problems.

Great Lakes Basin Commission. 1974. **Proceedings of the Recessions Rate Workshop.** Ann Arbor, Michigan. Includes information on data needs, federal and state recession rate programs, and discussion of recession rate measurement techniques and models.

Great Lakes Basin Commission, joint with Federal Regional Council-Region V. 1974. **A Strategy for Great Lakes Shoreland Damage Reduction.** Ann Arbor, Michigan. Discusses seven alternatives for erosion and flood damage reduction and proposes a strategy.

Great Lakes Basin Commission. 1975. **Great Lakes Basin Framework Study.** Shore Use and Erosion. Appendix 12. Ann Arbor, Michigan. Sets up a general planning framework for Great Lakes shorelands. Includes discussion of coastal processes and institutional setting and an analysis of shore property damage for each of the lakes and strategy for damage reduction.

Great Lakes Basin Commission.* 1976 **Relocation and Public Acquisition Alternatives for the Reduction of Shoreland Damages: A Benefit/Cost Study.** Ann Arbor, Michigan. A brief analysis of the benefits and costs of public acquisition and relocation as responses to erosion in Monroe County, Michigan. Not a formal benefit/cost analysis.

---

*Great Lakes Basin Commission no longer in existence. Federal depository libraries may have the reports.

Great Lakes Basin Commission Joint with U.S. Department of Agriculture, Soil Conservation Service.* 1977. **Proceedings of the Workshop on the Role of Vegetation in the Stabilization of the Great Lakes Shoreline.** Ann Arbor, Michigan. A look at the roles vegetation plays in shoreland management.

Great Lakes Basin Commission.* 1980. **Coastal Hazards in the Great Lakes Region.** Ann Arbor, Michigan. Includes an analysis of the problem of coastal hazards, a description of relevant state and federal policies and an analysis of their effectiveness. Makes recommendations on research and data collection, public information and education, and policies and programs.

Great Lakes Basin Commission. 1980. **Erosion/Insurance Study.** Ann Arbor, Michigan. A general discussion of the problem followed by a list of alternative management strategies focussing on effectiveness of insurance with one recommended (with rationales), also includes guidelines for recession rate calculations.

Great Lakes Basin Commission.* **The Role of Vegetation in Shoreline Management: A Guide for Great Lakes Shoreline Property Owners.** Ann Arbor, Michigan. Following a general discussion of coastal problems and the role of vegetation, this brochure includes a checklist for identifying particular shoreland problems, guideines fr shoreland planning and design with vegetation, and a plant list.

Hadley, David W. 1976. **Shoreline Erosion in Southeastern Wisconsin.** Wisconsin Geological and Natural History Survey. Special Report Number 5. Includes a description of the geology of Wisconsin's Lake Michigan shore, mechanisms of bluff slumping and briefly discusses possible solutions; indicates areas for research and the importance of a good data base.

Hanson, S.N., R. Chenoweth, W. and Wallace. 1978. **Great Lakes Shore Erosion Protection: Structural Design Examples.** Owen Ayres and Associates for Wisconsin Coastal Management. A report focussing on structural responses to shore erosion. Includes a general discussion of structural methods, design drawings and process, and a number of site examples in Wisconsin.

Hill, James D. 1970. **Bluff Erosion Study: Ludington Pumped Storage Project.** Master's Thesis. University of Michigan, Ann Arbor, MI. A basic study of bluff retreat on a site on eastern Lake Michigan which includes some discussion of erosion processes and methods of determining rates of bluff slumping.

Hill, J.D. (1970) **Bluff Erosion Study, Ludington Pumped Storage Facility,** MS Thesis, Dept. of Geology and Minerals, University of Michigan, 22 pages (comparison of air & water dating from 1938 & 1965).

Illinois Coastal Zone Management Program. **Lake Michigan Shoreline Erosion: A Report to State Officials,** Division of Water Resources. Briefly discusses the erosion problem in Illinois, the development of the Lake Michigan Shore Erosion Protection Plan and makes recommendations regarding planning principles, several specific sites and future actions.

---

*Basin Commission no longer in existence. Federal depository libraries may have the reports.

Michigan Department of Natural Resources. 1979. **Great Lakes Shoreland Erosion.** Division of Land Resource Programs. A brochure which discusses Michigan's Shorelands Protection and Management Act as it applies to high risk erosion areas; includes discussion of some of the costs associated with erosion, methods for determining rate and extent of the process, and restrictions and standards for new development on shore.

Michigan Sea Grant Program. 1980. **Shoreline Erosion: Questions and Answers.** Ann Arbor, Michigan. A question and answer format brochure for property owners which includes information on shore protection structures, their effectiveness and relevant permits and laws. A glossory and sources of further information.

Michigan Sea Grant Program. 1980. **Buying Great Lakes Shoreline Property.** Brochure.

Powers, W.E. (1958) **Geomorphology of the Lake Michigan Shoreline,** Report on research done under project No. NR 387-015, contract No. Nonr-1228(07), Geography Branch, Office of Naval Research, Department of Geography, Northwestern Universtiy. (Rates based on comparison of land surveys 1830's and 1956).

Pennsylvania Coastal Zone Management Program. 1975. **Shoreline Erosion and Flooding: Erie County, Pennsylvania.** Department of Environmental Resources. Extensive field study of erosion and flooding in Erie County, PA. Which includes a very good discussion of contributory mechanisms.

Rogers, Spencer M. 1981. **A Homeowner's Guide to Estaurine Bulkheads.** North Carolina Sea Grant College Program, UNC-SG-81-11.

Roden, Robert W. 1977. **Some Non-Structural Alternatives for the Reduction of Shore Damages.** Wisconsin Coastal Management Program, Wisconsin Department of Natural Resources. A fairly detailed description of non-structural responses to coastal hazards including warning/disclosure mechanisms, land use controls/zoning, delineation of a hazard zoning district, zoning administration, insurance, relocation of buildings and public acquisition of hazard areas.

Schultz, Carl J. 1979. **Erosion Hazard Areas: An Option for Shore Management.** Wisconsin Geological and Natural History Survey, University of Wisconsin Sea Grant Institute. A further development of Wisconsin Shore Erosion Plan which focuses on non-structural approaches; includes good assessment discussions of delineating of hazard areas and potential management strategies.

Springman, Roger and Steve Born. 1979. **Wisconsin's Shore Erosion Plan: An Appraisal of Options and Strategies.** Wisconsin's Coastal Management Program. A policy plan which assesses structural and non-structural options for reducing shore erosion damage in Wisconsin, including discussion of present framework, possible state policy responses (regulation, financial and technical assistance) and several valuable appendices.

Shore Property Hazards Brochure. 1979. Canadian/Ontario. Coping with the Coast Series. Available from Marine Information Center, Bayfield Lab, Box 5050 Burlington Ontario.

Transportation Research Board. 1978. **Landslides: Analysis and Control.** Transportation Research Board, National Research Council: Special Report 176. Robert L. Schuster and Raymond J. Krizek, Editors. National Academy of Sciences, Washington, D.C. Good discussion of earth mass movements in general (not just coasts) including mechanics, identification, analysis and mitigation.

U.S. Army Corps of Engineers. 1982. **Low Cost Shore Protection.** 36 pages.

U.S. Army Corps of Engineers. 1982. **Low Cost Shore Protection:** A Property Owner's Guide. 159 pages.

U.S. Army Corps of Engineers. 1982. **Low Cost Shore Protection:** A Guide for Local Government Officials. 108 pages.

U.S. Army Corps of Engineers. 1982. **Low Cost Shore Protection: A Guide for Engineers and Contractors.** 173 pages.

U. S. Army Corps of Engineers. **Help Yourself: A Discussion of erosion problems on the Great Lakes and alternative methods of shore protection.** North Central Division, Chicago, Ill. A brochure for property owners which includes a map of generalized shore types, a guide for selecting shore protection, permitting requirements, and the advantages and disadvantages of various solutions, primarily structural in orientation.

U.S. Army Corps of Engineers. 1978. **Summary Report: Great Lakes Shoreland Damage Study.** North Central Division, Chicago, Il. Includes the background, methodology, and results of a damage assessment survey.

U.S. Army Corps of Engineers. 1982. **Low Cost Shore Protection.** An overview of the various low cost shore protection devices tested in a nationwide demonstration project.

U.S. Army Corps of Engineers. 1982. **Low Cost Shore Protection: A Guide for Property Owners.** Detailed information to prepare the property owner to cope with shore erosion problems. Booklet covers the various protection devices and pros and cons of various systems.

U.S. Army Corps of Engineers. 1982. **Low Cost Shore Protection: A Guide for Engineeers and Contractors.**

Vallejo, Luis E. and Tuncer B. Edil. 1979. **Design Charts for Development and Stability of Evolving Slopes.** University of Wisconsin Sea Grant Program Reprint. Reprinted from J. Civil Engineer Design, 1 (3): 231-252 (1979). Includes a background of stability analysis, develops a set of design charts and describes their use.

Vallejo, Luis E. and Tuncer B. Edil. 1981. **Stability of Thawing Slopes: Field and Theoretical Investigations.** Proceedings of the 10th International Conference on Soil and Mechanics and Foundation Engineering. Stockholm, Sweden. A discussion of the stability analysis of thawing slopes in cohesive soils. The analysis is based on the particulate structure of the thawing slopes.

Valentine-Thomas and Associates, Inc. 1979. **A Study of Shoreline Conditions and Erosion Processes at the Grand Trunk Site for the City of Port Huron, Michigan.** An analysis and recommendation for a specific shore protection project in Port Huron, Michigan.

Way, Douglas S. 1973. **Terrain Analysis: A Guide to Site Selection Using Aerial Photographic Interpretation.** Downden, Hutchingson & Ross, Inc., Stroudsburg, PA. A basic handbook on the use of aerial photography to identify and analyze landforms.

White, Gilbert F. and J. Eugene Haas. 1975. **Assessment of Research on Natural Hazards.** MIT Press, Cambridge, MA. Interesting analysis of social and behavioral characteristics of responses to a variety of hazards. Primarily recommends areas for futher research.

NOAA COASTAL SERVICES CENTER LIBRARY
3 6668 14102 1321