United States
Environmental Protection
Agency

Office of Water
Program Operations (WH-547)
Washington DC 20460

June 1980
430/9-80-007

18053

Water

EPA

Aquaculture Systems for Wastewater Treatment

An Engineering Assessment

U.S. Environmental Protection Agency

TD
523
.R44
1981

MCD-68

Disclaimer Statement

This report has been reviewed by the Environmental Protection Agency and approved for publication. Approval does not signify that the contents necessarily reflect the views and policies of the Environmental Protection Agency or the U.S. Army Corps of Engineers, nor does mention of trade names or commercial products constitute endorsement or recommendation for use.

Notes

To order this publication, MCD-68, "Aquaculture Systems for Wastewater Treatment: An Engineering Assessment," write to:

General Services Administration (8BRC)
Centralized Mailing List Services
Building 41, Denver Federal Center
Denver, Colorado 80225

Please indicate the MCD number and title of publication.

18053

EPA 430/9-80-007

AQUACULTURE SYSTEMS FOR WASTEWATER TREATMENT: AN ENGINEERING ASSESSMENT

Sherwood C. Reed, USA/CRREL
Robert K. Bastian, EPA/OWPO

Project Officers

Property of CSC Library

June 1980

U.S. Environmental Protection Agency
Office of Water Program Operations
Municipal Construction Division
Washington, D.C. 20460

U.S. Environmental Protection Agency
TD523 .R44 1981
7506988
JUN 30 1997
U.S. DEPARTMENT OF COMMERCE NOAA
COASTAL SERVICES CENTER
2234 SOUTH HOBSON AVENUE
CHARLESTON, SC 29405-2413

EPA Comment

This report is one of a series planned for publication by the U.S. EPA Office of Water Program Operations to supply detailed information for use in evaluating, selecting, developing, designing, and operating innovative and alternative (I/A) technologies for municipal wastewater treatment. This series will provide indepth presentations of available information on topics of major interest and concern related to I/A technologies. An effort will be made to provide the most current state-of-the-art information available concerning I/A technologies for municipal wastewater treatment.

These reports are being prepared to assist EPA Regional Administrators in evaluating grant applications for construction of publicly owned treatment works under Section 203(a) of the Clean Water Act of 1977. They also will provide state agencies, regulatory officials, designers, consulting engineers, municipal officials, environmentalists and others with detailed information on I/A technologies.

Harold P. Cahill, Jr.
Director
Municipal Construction Division (WH-547)

Property of CSC Library

CONTENTS

Engineering Assessment of Aquaculture Systems for Wastewater Treatment: An Overview 1

Sherwood C. Reed; U.S. Army Corps of Engineers
Robert K. Bastian; U.S. Environmental Protection Agency
William J. Jewell; Cornell University

Wetland Systems for Wastewater Treatment: An Engineering Assessment 13

George Tchobanoglous; University of California-Davis
Gordon L. Culp; Culp, Wesner, and Culp

Aquatic Plant Processes Assessment 43

E. Joe Middlebrooks; Utah State University

Engineering Assessment: Use of Aquatic Plant Systems for Wastewater Treatment 63

Walter J. O'Brien; Black & Veatch Consulting Engineers

Combined Aquaculture Systems for Municipal Wastewater Treatment - An Engineering Assessment 81

H. G. Schwartz, Jr. and B. S. Shin; Sverdrup & Parcel and Assoc., Inc.

Combined Aquaculture Systems for Wastewater Treatment in Cold Climates - An Engineering Assessment 105

Edward R. Persche; Whitman & Howard, Inc.

This publication contains the results of an effort to assess the current status of aquaculture technologies for wastewater treatment. The assessment includes an overview and individual engineering assessments covering various wastewater aquaculture systems involving wetlands processes, aquatic plant processes, and combined aquatic processes. The project was sponsored by the EPA Office of Water Program Operations and the U.S. Army Corps of Engineers Cold Regions Research and Engineering Laboratory and involved contractor assistance by the following individuals:

Mr. Gordon Culp
Culp, Wesner, and Culp

Dr. E. J. Middlebrooks
Utah State University

Dr. Walter J. O'Brien
Black & Veatch

Dr. Edward Pershe
Whitman & Howard, Inc.

Dr. H. G. Schwartz, Jr.
Sverdrup & Parcel and Assoc., Inc.

Dr. George Tchobanoglous
University of California-Davis

ENGINEERING ASSESSMENT OF AQUACULTURE SYSTEMS FOR WASTEWATER TREATMENT: AN OVERVIEW

Sherwood Reed — USACRREL, Hanover, N.H.
Robert Bastian — US EPA/OWPO, Washington, DC
William Jewell — Cornell University, Ithaca, NY

BACKGROUND

The use of aquaculture concepts for wastewater treatment has received increasing attention in recent years. Systems studied to date have included both natural and constructed wetlands, ponds, raceways and other structures based on various combinations of aquatic plants and animals.

In some cases these systems were not optimized for wastewater treatment since the principal goal was biomass production or the recovery of some other beneficial product. In other cases wastewater treatment has been the primary objective with byproduct recovery of secondary importance. Both types have been studied at the research level, tested at the pilot scale, and in some cases demonstrated as a full scale operational system.

Some of these systems have shown a potential for reducing energy requirements and operation and maintenance costs. The incentives of the Clean Water Act of 1977 provide a strong encouragement for increased use of such "innovative and alternative" technologies for wastewater treatment. However, much of the engineering profession, which is responsible for the design of municipal treatment facilities, is not familiar with these aquaculture concepts or their capabilities and limitations.

The purpose of this assessment was to define the current status of aquaculture technologies and to determine if they are ready for routine use in municipal wastewater treatment. If they are not ready for such use the assessment was to recommend procedures for reaching that goal. This could take the form of further research, demonstration, or construction of full scale "innovative" systems at selected locations.

A team of six internationally recognized engineers was retained to help conduct the engineering assessment. They represented a broad range of expertise and included both practicing consultants and university professors. All were experienced in both research and design and were knowledgeable regarding biological systems and

innovative technologies. The team included:

Mr. Gordon Culp
Culp Wesner and Culp.

Dr. E.J. Middlebrooks
Utah State University

Dr. Walter J. O'Brien
Black & Veatch

Dr. Edward Pershe
Whitman & Howard, Inc.

Dr. H.G. Schwartz, Jr.
Sverdrup & Parcel & Assoc. Inc.

Dr. George Tchobanoglous
University of California-Davis

This team was organized and directed by Mr. Sherwood Reed, USACRREL and Mr. Robert Bastian, EPA/OWPO. The basis for the assessment was a multi agency sponsored seminar entitled "Aquaculture Systems for Wastewater Treatment" held at the University of California - Davis, on September 11-13, 1979 (EPA 430/9-80-006). At this meeting research scientists, operating system personnel and others presented papers on various projects and concepts relative to aquaculture systems for wastewater treatment. The final day of the seminar was reserved for direct discussion and interchange between the team of engineers and the seminar speakers. Each member of the engineer team then prepared his assessment based on the seminar presentations, supplemented by other information available with general literature. The areas addressed were organized into three major categories and two team members assigned to each one:

1. Wetland processes - Tchobanoglous & Culp

2. Processes primarily dependent on aquatic plants - Middlebrooks & O'Brien

3. Combined processes where more than one element has a significant role - Schwartz & Pershe

This overview is based on those individual reports plus a review and analysis of the available information by the authors of the overview. This overview is organized in three topical areas with discussion, conclusions and recommendations presented for each.

WETLAND PROCESSES

For purposes of this assessment wetlands are defined as land

where the water table is at or above the surface for long enough each year to maintain saturated soil conditions and the growth of related vegetation. These can be either preexisting natural wetlands (eg. marshes, swamps, bogs, cypress domes and strands, etc.) or constructed wetland systems. Constructed systems can range from creation of a marsh in a natural setting where one did not permanently exist before to intensive construction involving earth moving, grading, impermeable barriers or erection of containers such as tanks or trenches. The vegetation that is introduced or emerges from these constructed systems will generally be similar to that found in the natural wetlands.

Studies in the United States have focused on peatlands, bogs, cypress domes and strands, as well as cattails, reeds, rushes, and related plants in wetland settings. A constructed wetland involving bullrushes in gravel filled trenches was developed at the Max Planck Institute in Germany. This patented process has seen limited application to date in the U.S. A number of projects have been developed in the U.S. in recent years for restoration or enhancement of wetlands. These use wastewater but are not necessarily optimized for wastewater treatment.

Current experience with wetland systems is generally limited to the further treatment of secondary effluents. In a few cases primary effluent has been applied in constructed systems. The removal efficiency of typical pollutants are reported as:

	% Removal	
	Natural Wetland (Sec. Effluent)	Constructed Wetland (Pri. Effluent)
BOD_5	70-96	50-90
SS	60-90	-
N	40-90	30-98
P	10-50	20-90

It is assumed that bacteria attached to plant stems and the humic deposits are the major factor for BOD and for nitrogen removal when plant harvest is not practiced. Plant production can play a more significant role in nutrient removal when harvesting is included. With respect to phosphorus removal the contact opportunities with the soil are limited in most natural wetland systems (an exception might be peat bogs) and a release of phosphorus has been observed during the winter in some cases. Based on current experience the land area being used for natural wetland systems ranges from 30 to over 60 acres per million gallons of wastewater applied. The surface area for constructed marshes range from 23 to 37 acres per million gallons of wastewater applied.

The major costs and energy requirements for natural wetlands are the preapplication treatment, pumping and transmission to the site, distribution at the site, minor earthwork, and land costs. In addition to these factors a constructed system may require the installation of a barrier layer and additional containment structures.

Other factors to be considered are potential disruption of the existing wildlife habitat and ecosystems in a natural wetland, loss of water via evapotranspiration for all wetlands in arid climates, the potential for increased breeding of mosquitoes or flies, and the development of odor. The major benefits that can be realized from use of wetlands include preservation of open space, wildlife habitat enhancement, increased recreation potential, streamflow stabilization and augmentation in addition to wastewater treatment.

Conclusions

1. Wetland systems can achieve high removal efficiencies for BOD, SS, trace organics and heavy metals. Their potential may exceed that achieved in mechanical treatment systems. The specific factors responsible for these high treatment levels are not clearly understood at this time.
2. Optimum, cost effective criteria are not yet available for routine design of wetland type municipal wastewater treatment systems throughout the U.S. The concept has been shown to be viable and should certainly qualify under current EPA definitions as an innovative technology.
3. The use of constructed wetlands has a greater promise of more general application. These have potential for better reliability and process control with a lesser risk of adverse environmental impact.
4. The use of natural wetlands offers a lesser opportunity for process control due to natural variability within the system. They do however have considerable potential as a low cost, low energy technique for upgrading wastewater effluents, especially for smaller communities located in areas of abundant wetlands. The prevention of adverse impacts on the existing, sensitive wetland ecosystem will require adequate monitoring and appropriate management practices.
5. Optimization of criteria for constructed wetlands should result in much lower land and preapplication treatment requirements as compared to the use of natural systems.
6. Health risks for wetland systems are probably not higher than for conventional treatments assuming that insect vectors are controlled and that harvested materials are not used for direct human consumption.
7. The potential for general, routine use of wetland systems, particularly the constructed type, seems high as soon as reliable, cost effective engineering criteria are available.

Recommendations

1. Development of reliable engineering criteria will require additional research and study. These efforts should focus on constructed wetlands or on large scale carefully controlled plots in natural wetlands.
2. Several large scale natural systems should be installed in different geographical locations, representing the major types of wetland systems, with a range of design loadings. These should be

extensively monitored to obtain "real world" operating information and to serve as the data base for development of design criteria. This development should be an interdisciplinary effort involving engineers, scientists and regulatory agencies.

3. A number of constructed wetland systems should be established concurrently in a variety of geographical settings with other variables held to the minimum. This should allow development of regionally applicable criteria and eventually of generalized relationships for universal application.

4. Studies of constructed systems should be directed towards minimizing cost and energy inputs. Therefore, tests with very dilute or highly treated effluents should be avoided. The focus should be on untreated wastewaters, primary effluents, and on nutrient removal mechanisms.

AQUATIC PLANT SYSTEMS

This assessment is based primarily on those systems that use free floating aquatic plants (macrophytes) for the treatment or polishing of wastewater. Most of the information that is available is limited to the use of either water hyacinths or duckweeds and most of these data are from water hyacinth systems in warm climates. These systems are all constructed and are generally similar in concept to wastewater treatment pond technology.

Water hyacinths have been studied in systems treating primary effluents, as the final treatment cells in multiple cell ponds, and as an advanced waste treatment step after conventional secondary treatment. A field scale system for treating industrial wastewaters is in operation at the NASA facilities in Bay St. Louis, MS and pilot scale systems are under study at a refinery in Baytown, TX. A field scale system incorporating duckweed is located in N. Biloxi, MS. Effluent from this two cell pond system is much better than secondary quality.

Water hyacinth systems are capable of removing high levels of BOD, SS, metals, and nitrogen, and significant removal of refractory trace organics. Removal of phosphorus is limited to the plant needs and probably will not exceed 50 to 70% of the phosphorus present in the wastewater. Phosphorus removal will not even approach that range unless there is a very careful management program with regular harvests. In addition to plant uptake the root system of the water hyacinth supports a very active mass of organisms which assist in the treatment. The plant leaves also shade the water surface and limit algae growth by restricting light penetration.

Multiple cell pond systems where water hyacinths are used on one or more of the ponds are the most common system design. Based on current experience a pond surface area of approximately 15 acres per million gallons seems reasonable for treating primary effluent to secondary or better quality. For systems designed to polish secondary effluent to achieve higher levels of BOD and SS removal an area of about 5 acres per million gallons should be suitable. For enhanced nutrient removal from secondary effluent an area of approximately 12

acres per million gallons seems reasonable. Effluent quality from such a system might achieve: less than 10 mg/L for BOD and SS, less than 5 mg/L for N, and approximately 60% P removal. This level of nutrient removal can only be obtained with careful management and harvest to yield 50 dry tons or more, per acre per year.

The organic loading rates and detention times used for water hyacinth systems are similar to those used for conventional stabilization ponds that treat raw sewage. However, the effluent from the water hyacinth system can be much better in quality than from a conventional stabilization pond, particularly with respect to: SS (algae), metals, trace organics, and nutrients.

Harvest of the water hyacinth or duckweed plants may be essential to maintain high levels of system performance. It is essential for high levels of nutrient removal. Equipment and procedures have been demonstrated for accomplishing these tasks. Disposal and/or reuse of the harvested materials is an important consideration. The water hyacinth plants have a moisture content similar to that of primary sludges. The amount of plant biomass produced (dry basis) in a water hyacinth pond system is about 4 times the quantity of waste sludge produced in conventional activated sludge secondary wastewater treatment. Composting, anaerobic digestion with methane production, and processing for animal feed are all technically feasible. However, the economics of these reuse and recovery operations do not seem favorable at this time. Therefore only a portion of the solids disposal costs will be recovered unless the economics can be improved.

The major cost and energy factors for water hyacinth systems are construction of the pond system, water hyacinth harvesting and disposal operations, aeration if provided, and greenhouse covers where utilized. Evapotranspiration in arid climates can be a critical factor. The water loss from a water hyacinth system will exceed the evaporation from a comparable sized pond with open water. Greenhouse structures may be necessary where such water loss and related increase in effluent TDS are a concern. Mosquito control is essential for water hyacinth systems and can usually be effectively handled with Gambusia or other mosquito fish. Legal aspects are also a concern. The transport or sale of water hyacinth plants is prohibited by federal and state law in many situations. The inadvertant release of the plants from a system to local waterways is a potential concern to a number of different agencies. Water hyacinth plants cannot survive or reproduce in cool waters so the concept will be limited to "warm" areas unless climate control is provided. Other floating plants such as duckweed, alligator weed, and water primrose have a more extensive natural range but limited data as their performance in wastewater treatment is available.

Conclusions

1. Aquatic plant systems using water hyacinths can achieve high removal efficiencies for BOD, SS, trace organics, heavy metals and nitrogen. The potential can equal, and may exceed that achieved in mechanical treatment systems.

2. Water hyacinth systems are ready for routine use in municipal wastewater treatment, at least within the geographical range where such plants grow naturally. Reliable engineering criteria are available for the design of systems for treating primary effluent, for upgrading existing systems, for advanced secondary treatment and for full AWT.

3. It is unlikely at this time that the costs of plant harvest and processing will be completely offset by the value of useful products (eg: animal feeds, compost, biogas, etc.).

4. Water hyacinth systems may be technially feasible even in northern climates if operated in a protected environment or run as a seasonal activity. However, this has yet to be shown to be cost effective for climatic zones where the plants cannot exist naturally.

5. Nutrient removal in water hyacinth systems is more complex than uptake by the plant alone, but the responsible mechanisms are not yet clearly defined.

6. Duckweeds are a more cold tolerant plant than the water hyacinth. Wastewater treatment experience with these plants is limited and engineering criteria for routine design are not yet available.

7. Many other cold tolerant aquatic plants exist but their potential for wastewater treatment has not been evaluated.

Recommendations

1. Further optimization of water hyacinth system design is possible. This should include: tracer studies of existing systems to determine actual detention time, the full range of organic and hydraulic loadings that may be possible, and on mass balances of water and pollutant materials.

2. Additional study is needed to establish optimum plant harvesting and utilization techniques and to evaluate alternative methods for removing additional phosphorus with water hyacinth systems.

3. A study should be undertaken to evaluate the potential for water hyacinth systems in cooler climates. This should include energy requirements and overall cost effectiveness. If results of the paper study are favorable a pilot testing/demonstration program might be considered.

4. Research and demonstration projects should focus on the use of duckweed and other plants (especially the more cold tolerant types) for wastewater treatment. These efforts should include: removal kinetics for pollutants as a function of detention time, temperature, plant type, etc.; and the effect of system configuration, season, benthic materials, and plant harvest on degree of treatment.

COMBINED SYSTEMS

For purposes of this assessment, combined systems are defined as treatment systems derived from aquaculture concepts that either contain more than one active aquaculture component in a single unit or that are combined with other aquaculture or conventional units to form a process. An example of the former are the experiments at Woods Hole Oceanographic Institute involving a number of different

marine organisms. Examples of the latter are the Solar Aquacell System at Hercules CA, the marsh/pond systems studied at Brookhaven National Laboratories, LI, and the use of fish in the final cells of wastewater stabilization ponds in Arkansas.

Based upon the results of experimental and pilot testing work to date, it is clear that both agricultural and municipal wastewater in treated or partially treated forms can be used in fish culture and other aquatic protein or biomass production systems. Fin fish such as Tilapia, carp, gamefish and bait minnows have been very successfully raised in and harvested from wastewater stabilization pond systems. Daphnia, shellfish, vascular plants, algae, and other aquatic organisms have also been successfully produced and harvested. However, it is not clear that such systems can be optimized for both waste treatment and protein production purposes at the same time.

Since each concept is unique it is not possible to present a general summary of performance for "combined systems". The potential for routine use must also be discussed on an individual basis. For that reason, the examples cited above are discussed individually below. Discussion of this limited number of projects is not intended to imply that there are not other viable systems or combinations, but space limitations have precluded an exhaustive presentation. It is hoped that the assessment of these few projects will provide some general indications or trends regarding combined systems.

Marine Polyculture
Woods Hole Oceanographic Institute, MA

This pilot scale, continuous flow system was designed to remove nitrogen from secondary effluents and at the same time culture marine organisms that have commercial value. The secondary effluent was diluted with seawater and introduced to a system that consisted of shallow algae ponds, followed by aerated raceways containing stacked trays of shellfish and then into a final unit for seaweed production.

The algae ponds were designed as the initial nitrogen removal step. The projected area requirement for this step was comparable to that required for conventional facultative stabilization ponds. Problems encountered at this step included inhibition of algae production by particulate matter in the secondary effluent, seasonal variation of algae species and protozoan predation. Some algae species proved detrimental to shellfish culture and the problem of algae species control was not resolved. The shellfish experiments with the American oyster and hard clams indicated slow growth rates and high mortality. The last unit contained seaweeds for final nutrient removal with vigorous circulation to keep the seaweed in suspension. Overall nitrogen removal was 89% with all components functioning but the overall cost effectiveness was questionable since the shellfish production unit was not successful. It appears that nitrogen removal could be achieved by just a seaweed unit without the preliminary algae and shellfish steps.

Solar Aquacell System
Hercules, CA

This system was developed through bench and pilot scale testing of combined aquaculture and conventional technologies. A full scale system has been recently constructed at Hercules, CA. The system consists of a two cell anerobic unit, followed by an aerated cell followed by a final aerated cell covered with water hyacinths and some duckweeds. An internal feature of all cells are buoyant plastic strips to serve as a substrate for the growth of attached organisms. The entire system is covered by a (double layer polyethylene, air inflated roof) greenhouse structure. Aeration is provided by submerged tubing and is low to moderate in intensity.

Performance results are not yet available from the Hercules system. Based upon pilot units, tested elsewhere, it was predicted that final effluent quality would be 5 mg/L or less for BOD and SS if 5 days detention time is provided in the final water hyacinth cell. The buoyant plastic webbing, with its attached growth is credited with 80% or more of the removal achieved in this cell. Removal of total nitrogen was about 50% in the same 5 day detention pilot tests and the water hyacinth plants accounted for only 10% of that removal. Phosphorus removal was relatively low (1-2 mg/L removed in 5 days) since the aquatic plants and organisms are the only pathways available.

The Solar Aquacell concept requires a regular schedule of water hyacinth harvest, processing and disposal. The Hercules, CA system also includes ozone disinfection and a sand filter for final polishing to maximize reuse potential for the effluent. A functional analysis of the various elements and components in the system seems to indicate that the major portion of BOD, SS, and nitrogen removal is provided by the anaerobic cells and by the attached biomass on the plastic webs in the aerated cells. The major function of the water hyacinths and duckweeds may be in shading the water surface to prevent algae growth. The use of the buoyant plastic web in an aerated pond is a novel and innovative application. The system can then benefit from both suspended and attached organisms and the presence of the webs should reduce or eliminate short circuiting of flow in the system.

Marsh-Pond System
Brookhaven National Laboratory, NY

This 20,000 gpd, pilot unit included an aerated holding cell with 2 1/2 days detention time followed by a 0.2 acre constructed marsh followed by a 0.2 acre unaerated pond with a partial cover of floating duckweeds. Effluent from the pond was then applied to the land at a forested site in a groundwater recharge experiment. This assessment is not concerned with the land application step or a parallel experiment involving overland flow ahead of another marsh/pond combination.

The system was studied for several years (1975-1978) and received a wide variation of flow and pollutant loadings. Effluent recycle from the pond to the head end of the marsh was conducted frequently to maintain flow in the system. However, neither this recirculation or the preaeration were controlled in a regular manner. The system was operated on a year-round basis in the relatively temperate winter climate on Long Island (average air temperature below freezing 5 months

of the year and the water temperature in the system was 2°C or less 4 months of the year). Reported effluent characteristics averaged for the period 1975-1977 were:

	mg/L	% Removal
BOD	21	89
SS	42	91
TKN	11	63
Total P	2	66

The parallel overland flow marsh/pond produced slightly better results in all categories. Neither system during the period under discussion could consistantly meet secondary treatment standards for suspended solids. Both however, provided an excellent, and probably cost effective preapplication treatment for the groundwater recharge operation. It is not possible from the published data on the Brookhaven studies to develop optimum engineering criteria for rational design since detention times, mass balances, effect of configuration, season, plant type, etc. were not quantified.

Fin Fish in Stabilization Ponds
Benton, Ark.

There are numerous examples of successful fish culture operations, with a variety of species, in cooling ponds and wastewater stabilization ponds. This assessment will focus on studies in Arkansas where the effect of fin fish on water quality improvement was evaluated in controlled experiments.

The preliminary experiments compared parallel 3 cell stabilization ponds receiving equal volumes of the same wastewater (BOD 260 mg/L, SS 140 mg/L). The cells in one set were stocked with silver, grass, and bighead carp while the other set received no fish and was operated as a conventional stabilization pond. The comparitive study continued for a full annual cycle. Results indicated generally similar performance of the two systems but the fish culture units consistantly performed somewhat better than the conventional pond. For example, the effluent BOD from the fish system ranged from about 7 to 45 mg/L with values less than 15 mg/L obtained more than 50% of the time. The conventional pond system had effluent BOD ranging from 12 to 52 mg/L with values less than 23 mg/L about 50% of the time. Suspended solids were very similar in the effluents for both systems except in July when the concentration was about 110 mg/L for the conventional pond and 60 mg/L for the fish system.

The second phase of the study was conducted at the same location with the same wastewater. The six pond cells were all connected in series and a baffle constructed in each to reduce short circuiting. Silver carp and bighead carp were stocked in the last four cells and additional grass carp, buffalofish and channel catfish in the final cell. No supplemental feed or nutrients were added to the fish culture cells. Estimated fish production after 8 months was over 3000 pounds per acre.

Effluent quality steadily improved during passage through the six

cell system. The BOD removal for the entire system averaged 96% for the 12 month study period. About 89% of that removal was achieved in the first two conventional stabilization cells. Removal of suspended solids averaged 88% in the entire system with 73% of the removal occurring in the first two conventional stabilization cells. It is not clear wether the fish or the additional detention time or some combination is responsible for the additional 7% BOD removal in the final 4 fish culture cells. The final average effluent concentration of about 9 mg/L is typical for six cell conventional stabilization ponds of comparable detention time. It seems very likely that the fish contributed significantly to the low suspended solids value in the final effluent (17 mg/L) via algal predation. A value two or three times that high might be expected for conventional stabilization ponds.

Conclusions

1. Finfish were effective in providing further treatment in wastewater treatment ponds. Their major role seems to be suspended solids control for final polishing.
2. It does not appear that aquaculture components in "combined systems" can be optimized for both protein or biomass production and waste treatment in the same unit.
3. Systems involving higher forms of animals seem to be less efficient (at waste treatment), require more land area, or are more difficult to control than systems primarily based on plants.
4. There is sufficient information available to install fish culture units in the final cells of stabilization ponds. There is not enough information available to permit routine design of such units for wastewater treatment. Specific removal rates and growth rates and O&M requirements under different environmental and wastewater conditions need further definition.
5. Most of the other combined systems discussed here are either in the exploratory or developmental stage and rational criteria for their routine design are not available at this time.

Recommendations

1. Development of new concepts in the use of polyculture or combined systems for wastewater treatment should be strongly encouraged. The focus should be on high rate, low energy combinations involving plants and possibly animals or mechanical elements.
2. Further study and evaluation of combined systems is necessary. This should focus on identifying critical components and on the development of engineering design criteria.
3. The most promising concepts should be tested in a variety of geographical settings to define removal kinetics and develop criteria for a range of wastewaters and environmental conditions. This would include the degree of thermal protection and energy required for operation in cooler climates.
4. Studies should focus on the health effects of the direct use of animal protein harvested from these systems in human foods. Studies

should also consider development of alternative products from the animal protein.

REFERENCES

References are not included in this Overview since it was drawn from the six engineering assessments listed previously and from presentations at the Davis, CA aquaculture seminar (EPA 430/9-80-006; Sept. 1979).

WETLAND SYSTEMS FOR WASTEWATER TREATMENT: AN ENGINEERING ASSESSMENT

George Tchobanoglous — Department of Civil Engineering, University of California, Davis, CA

Gordon L. Culp — Culp, Wesner, and Culp, Cameron Park, CA

ABSTRACT

The use of natural and artificial wetlands for the treatment of wastewater is examined in this engineering assessment. The primary objective of the assessment is to answer the question of whether the technology of using natural and artificial wetlands for the treatment of wastewater is ready for routine use and, if not, what must be done to make it a reality. Assessed on the basis of 1) treatment efficiency and reliability, 2) availability of design criteria and procedures, 3) availability of proven management techniques, 4) energy and resource consumption, 5) costs, and 6) health risks, it is concluded that the current status of wetlands technology is not yet developed to the point where the use of wetland systems can be considered routine. Data and information that must be developed before the design of wetland systems can become a rational undertaking are identified and discussed.

INTRODUCTION

It has been estimated that wetlands occupy about four percent of the surface of the continental United States. Within the past 20 years, the use of natural wetlands as a low cost alternative to conventional and advanced wastewater treatment has received considerable attention. The use of artificial wetlands for the same purpose is also an outgrowth of this interest. It is, therefore, the purpose of this paper to present an engineering assessment of the use of both natural and artificial wetlands for the treatment of wastewater. To accomplish this purpose, the material to be presented has been organized into sections dealing with 1) the characteristics of natural and artificial wetlands, 2) the use of wetlands for wastewater treatment, 3) the implementation of wetland treatment systems, 4) the management of wetland systems, 5) an assessment of what is known and 6) research needs. What is known from an engineering point of view is discussed in the first four sections. What needs to be known is considered in the last two sections.

The findings contained in this report were derived, in part, from information gained from participation in a three-day workshop/seminar entitled, "Aquaculture Systems For Wastewater Treatment," held on the University of California, Davis, Campus on September 11, 12, and 13, 1979. Additional information and data were gathered from the literature. Because this report is an engineering assessment, the primary objective is to answer the question of whether the technology of using natural and artificial wetlands for the treatment of wastewater is ready for routine use and, if not, what must be done to make it a reality.

CHARACTERISTICS OF WETLANDS

Wetlands have been defined as "... land where the water table is at or above the land surface for long enough each year to promote the formation of hydric soils and to support the growth of hydrophytes as long as other environmental conditions are favorable." (2). Because water is such a fundamental component of all wetlands, most wetland classification schemes are based on a consideration of hydrogeological factors. From the standpoint of wastewater treatment and water quality management, such a classification is useful because the hydrogeology of wetlands is the factor that can be controlled most easily. Both natural and artificial wetlands are considered in the following discussion.

Natural Wetlands

The principal types of natural wetlands may be classified as 1) riverine, 2) lacustrine, 3) palustrine, and 4) tidal. The important characteristics of these wetlands are reported in Table 1. Reviewing the descriptions of the natural wetlands given in Table 1, it is clear that performance of these wetlands when used for the treatment or disposal of wastewater will depend to a large extent, on the local surface and groundwater hydrology. With respect to each of the major water inputs (surface, ground, atmosphere, and tidal), natural wetlands can be classified as 1) inflow/outflow, 2) no inflow/outflow, and 3) inflow/no outflow. For example, a number of palustrine wetlands in the central states have no surface water inflow or outflow. When these wetlands are used for the disposal of wastewater, the survival of the existing natural ecosystems will be highly dependent of the organic and inorganic nutrient loadings. Where riverine wetlands are used, the treatment capacity will depend on the surface water inflow and outflow. Thus, detailed hydrologic studies must be conducted before natural wetlands are used for the treatment or disposal of wastewater if this resource is to be protected.

Artificial Wetlands

Wetlands constructed in locations where none existed previously are usually termed "artificial." Such wetlands have been implemented for a variety of purposes including habitat enhancement, recreation and wastewater treatment. Because the purpose of this report is to assess the use of wetlands for wastewater treatment, only those constructed for such use will be considered in this discussion. The principal types of artificial wetlands used for wastewater treatment are reported in Table 2.

Table 1

HYDROLOGICAL CLASSIFICATION OF NATURAL WETLANDS[a]

Type	Description
Freshwater	
Riverine	Wetlands adjacent to or near rivers or streams where the water in the river or stream is the principal inflow to the wetlands. Inflow may be direct or by subsurface seepage.
Lacustrine	Wetlands adjacent to or near lakes.
Palustrine	Wetlands not confined by channels and not adjacent to lakes. Because palustrine wetlands are isolated from open bodies of water, such as streams, rivers, or lakes, there is little exchange of water. Ombrogenous bogs, blanket bogs, and sunkan minerotrophic marshes are examples of palustrine wetlands.
Saline	
Tidal	Wetlands whose waters are subject to tidal fluctuations. Four distinct wetlands can be defined: 1) wetlands adjacent to streams, 2) areas continually covered with water in which the direction of flow changes with the tide, 3) areas that are normally covered with water, but are drained at low tide, and 4) high marsh areas covered with water only of high tides.

[a]Derived in part from References 11 and 30.

Table 2

ARTIFICIAL WETLANDS USED FOR THE TREATMENT OF WASTEWATER

Type	Description
Freshwater	
Marshes	Areas with semi-pervious bottoms planted with various wetlands plants such as reeds or rushes.
Marsh-pond	Marsh wetlands followed by pond.
Ponds	Ponds with semi-pervious bottoms with embankments to contain or channel the applied water. Often, emergent wetland plants will be planted in clumps or mounds to form small sub-ecosystems.
Trench	Trenches or ditches planted with reeds or rushes. In some cases, the trenches have been filled with peat.
Trench (lined)	Trenches lined with an impervious membrane usually filled with gravel or sand and planted with reeds.

[a]Derived in part from References 11 and 30.

THE USE OF WETLANDS FOR WASTEWATER TREATMENT

It is the purpose of this section to review what use has been made of wetlands for wastewater treatment. To do this, the material to be presented is organized into three sections: 1) an overview of the principal types of natural and artificial wetlands that have been used for the treatment of wastewater, 2) the physical, chemical, and biological transformations that occur in wetlands that effect water quality, and 3) documentation of the removal efficiencies observed in wetlands for the various constituents found in wastewater.

Wastewater Treatment in Wetlands

The purposeful use of wetlands for wastewater treatment is a relatively recent development dating back to the early 1960's. It should be noted, however, that there are a number of instances where wastewater discharges to wetlands date back to the 1920's and earlier. For example, the Brillion Marsh in Wisconsin has been receiving domestic sewage since 1923 (21). In many cases, discharge to wetlands represented the only means of disposing of a community's wastes.

Treatment in Natural Wetlands To date, where natural wetlands have been used for the treatment of wastewater, the usual practice has been to apply treated effluent. In most cases, the objective has been the improvement of water quality. In a few instances, enhancement of the wetlands habitat has been the major objective.

Summary information on representative natural wetlands that have been used for wastewater treatment are reported in Table 3. As reported, secondary effluent has been applied most commonly. It is also interesting to note that most applications were started within the past ten years.

Treatment in Artificial Wetlands One of the pioneers in the use of artificial wetlands for the treatment of wastewater is Kathe Seidel (21). She and her co-workers at the Max Planck Institute in Germany have been studying the use of plants for this purpose since the early 1950's. A patented system in which gravel and sand are placed in a lined trench with central drainage and planted with reeds or rushes is an outgrowth of her work at the Institute (21). Representative examples of artificial wetland systems used for the treatment of wastewater are presented in Table 4.

Transformations Occurring in Wetlands

The physical, chemical, and biological transformations occurring in wetlands must be understood if the removal of the constituents in wastewater is to become a scientific undertaking. From an engineering standpoint, the transformations that are of most importance are those occurring to reduce or alter the concentrations of the various constituents contained in wastewater and those associated with the decomposition of the dead organic matter that is produced in wetlands.

Removal Mechanisms For Wastewater Contaminants The principal removal mechanisms for the contaminants in wastewater in wetlands are summarized in Table 5. The mechanisms have been identified on the basis of observations of natural systems and laboratory and pilot scale aquatic treatment systems. An

Table 3

TYPICAL NATURAL WETLANDS USED FOR WASTEWATER TREATMENT AND DISPOSAL

Type (location)	Type of Wastewater Applied	Remarks	References
Cypress domes (Florida)	Secondary	Geographically limited	9,10
Northern peatlands (Michigan, Wisconsin)	Secondary	Marshland percolation/ disposal system	7,15,16,17,34
Cattail marshes (Wisconsin)	Secondary	Significant nutrient reductions	21,23,24,29
Freshwater tidal marsh (New Jersey)	Secondary	Possible tertiary treatment	33
Lacustrine marsh (Hamilton Ontario, Canada)	Secondary	Sediment ion most important	19
Swamplands (Hay River, Canada)	Secondary		12,13
Wetlands, general (Massachusetts, Florida)	Secondary		8,35,36

Table 4

TYPICAL ARTIFICIAL WETLAND SYSTEMS USED FOR THE TREATMENT AND DISPOSAL OF WASTEWATER

Type (location)	Type of Wastewater Applied	Remarks	References
Meadow-marsh-pond system/ (New York)	Screened-comminuted-aerated-unsettled raw wastewater		22
Ponds with reeds or rushes/ (Germany, Holland)	Settled primary, secondary	Process defined in U.S. Patent No. 3,770,623	5,27
Peat filled trench systems/ (Finland)	Settled primary, secondary	Variable trench depths	7
Peat filter/ (Minnesota)	Secondary	Need 20 percent air space volume in soil	7,25
Marsh-pond system/ (California)	Secondary	Enhancement project	4

Table 5

REMOVAL MECHANISMS IN WETLANDS FOR THE CONTAMINANTS IN WASTEWATER[a]

Mechanism	Contaminant Affected[b]: Settleable Solids	Colloidal Solids	BOD	Nitrogen	Phosphorus	Heavy Metals	Refractory Organics	Bacteria and Virus	Description
Physical									
Sedimentation	P	S	I	I	I	I	I	I	Gravitational settling of solids (and constituent contaminants) in pond/marsh settings.
Filtration	S	S							Particulates filtered mechanically as water passes through substrate, root masses, or fish.
Adsorption		S							Interparticle attractive force (van der Waals force).
Chemical									
Precipitation					P	P			Formation of or co-precipitation with insoluble compounds.
Adsorption					P	P	S		Adsorption on substrate and plant surfaces.
Decomposition							P	P	Decomposition or alteration of less stable compounds by phenomena such as UV irradiation, oxidation, and reduction.
Biological									
Bacterial Metabolism[c]		P	P	P			P		Removal of colloidal solids and soluble organics by suspended, benthic, and plant-supported bacteria. Bacterial nitrification/denitrification.
Plant Metabolism[c]							S	S	Uptake and metabolism of organics by plants. Root excretions may be toxic to organisms of enteric origin.
Plant Absorption				S	S	S	S		Under proper conditions significant quantities of these contaminants will be taken up by plants.
Natural Die-Off								P	Natural decay of organisms in an unfavorable environment.

[a]Adopted from Reference 26.

[b]P=primary effect, S=secondary effect, I=incidental effect (effect occurring incidental to removal of another contaminant).

[c]The term metabolism includes both biosynthesis and catabolic reactions.

understanding of these mechanisms and their corresponding rates of reaction is important in 1) assessing the performance of existing natural wetlands in the treatment of wastewater and 2) the design of artificial wetlands treatment systems.

Referring to Table 5, the removal mechanisms have been classified as physical, chemical, and biological. This classification has been used so that the factors governing each mechanism can be defined and ultimately modelled. In wetlands, these removal mechanisms are operative in the water column; in the soil column beneath the wetland; and at the interface between the water and soil columns. Most of the biological transformations that occur in wetlands take place on or near a surface to which the bacteria are attached. Thus, the presence of emergent vegetation and humus (discussed below) is very important with respect to the biological transformations that occur in wetlands.

Decomposition of Dead Organic Matter In addition to the removal of the constituents in wastewater, processes leading to the eventual decomposition of the dead organic matter found in wetlands, derived primarily from plant tissue, are of fundamental importance in the operation and management of wetland treatment systems. Two basic processes must be considered. They are mineralization and humification (14,31).

Mineralization occurs as a result of the metabolism of microoganisms. As noted in Table 5, the term metabolism refers to both biosynthesis, in which organic matter is assimilated into cell tissue, and to catabolism, in which organic matter is converted to simple compounds to obtain energy for cell systhesis and maintenance. Dead organic matter not used for cell production is released in the form of minerals or simple organic compounds. This release of minerals and organic compounds may effect the quality of effluent from wetlands.

Humification is the process by which organic compounds are transformed into a material called humus. The process of humification involves a long series of biochemical transformations in which a variety of organic compounds are slowly converted into complex organic heteropoly-condensates with bonds of different strengths (31). Bonding with mineral constituents in the environment, such as metal ions in solution and clays in the substrate affects both the formation and stability of humic substances (31).

The development of humus in wetlands is especially important in the treatment of wastewater because this material forms an attachment medium for bacteria. Denitrification is thought to occur as wastewater flows through humus layers in wetlands.

Treatment Efficiency in Wetlands

If wetlands are to be used for the treatment of wastewater, it is important to know which constituents will be removed, the extent to which they will be removed, and the factors controlling their removal. The constituents that are removed and the extent to which they are removed are considered in the following discussion. Some of the factors affecting their removal have been considered in the previous discussion dealing with the transformations occurring in wetlands. These and other factors are also considered in the section dealing with the design of wetland systems.

Constituent Removal Efficiencies In reviewing the literature dealing with wetlands, a great deal of confusion exists in the reporting of performance data

for natural and artificial systems used for the treatment of wastewater. In most cases, the data are so confounded in a statistical sense that little or no usable information can be derived. Also, there is no standardization regarding the basis on which performance data are reported. For example, in some articles, performance data are reported as a function of time, while in others as a function of distance. Usually, no basis or information is given on how time or distance are interrelated. Further, the data for most of the natural systems are extremely site specific and should not be generalized.

Recognizing the above limitations, the reported removal ranges for the constituents of concern in wastewater are presented in Table 6. From a review of the limited data presented in Table 6 it can be concluded that the performance of wetlands with respect to most constituents of concern is not well defined. Further, the range of the values reported in Table 6 is also of concern, especially the lower removal efficiencies.

Constituent Removal Kinetics Based on a review of the data in the literature on both natural and artificial wetlands and on overland flow systems, which can be considered to be wetlands, it appears that the removal of BOD_5, TOC, and COD can be described with a first order function of the form:

$$C_t = C_o e^{-kt} \qquad (1)$$

where
- C_t = concentration remaining at the time t, mg/l
- C_o = concentration at time t=0, mg/l
- k = specific removal rate constant for given constituent, at 20°C, 1/d
- t = detention time in wetland, d.

Based on preliminary evidence, it appears that such a relationship may also apply to the removal of pathogenic microorganisms, certain trace organics, and heavy metals.

If it is assumed that 95 percent of the BOD_5 in primary wastewater is removed in 10 days, the value of k is on the order of 0.3 day^{-1}. Because of the areal extent of most wetlands the value of k will depend,to a large extent, on the temperature. From experience with other biological systems, the effect of temperature can probably be modelled with sufficient accuracy using the following expression.

$$k_T = k_{20}\theta^{(T-20)} \qquad (2)$$

where
- k_T = removal rate constant at temperature T, 1/d
- k_2 = removal rate constant at 20°C, 1/d
- θ = temperature coefficient, 1.05-1.08
- T = temperature, °C

The temperature is assumed to be that of the water in the wetland. The significance of the above equation for cold regions is that the area of most wetlands must be increased by a factor of two or more during the winter to achieve the same level of treatment. Because it is assumed that the bacteria attached to the plant stems and humus are responsible for treatment, the fact that the wetland plants may be dormant or die in the winter is of little concern with respect to BOD removal unless the physical plant support structure is lost.

Table 6

REPORTED REMOVAL EFFICIENCY RANGES FOR THE CONSTITUENTS IN WASTEWATER IN NATURAL AND ARTIFICIAL WETLANDS

	Removal efficiency, %			
	Natural wetlands		Artificial wetlands	
Constituent	Primary	Secondary	Primary	Secondary
Total solids		40-75		
Dissolved solids		5-20		
Suspended solids		60-90		
BOD_5		70-96	50-90	
TOC		50-90		
COD		50-80	50-90	
Nitrogen (total as N)		40-90	30-98	
Phosphorus (total as P)		10-50	20-90	
Refractory organics				
Heavy metals[a]		20-100		
Pathogens				

[b]Removal efficiency varies with each metal.

The removal kinetics for nitrogen and phosphorus are not as well defined. In most natural systems, receiving wastewater, little or no plant management or harvesting is practiced. The net annual nitrogen requirements of the plants, in most cases, is insignificant in terms of the applied nitrogen. Thus, nitrogen removal is primarily dependent upon nitrification-denitrification reactions which are accomplished by bacteria attached to plant stems or present at the soil water interface. The reactions are dependent upon the temperature, the concentration of dissolved oxygen, the nature of the support structure, and the detention time (which is related to depth of water and flow rate). In natural wetlands it appears that a moving concentration front of phosphorus often develops in a manner similar to that observed in ion exchange columns. It has also been observed, in some cases, that phosphorus is released during the winter, usually in association with scoured particulate matter. Thus, operational control may be a key factor in optimizing the removal efficiency of natural wetlands with respect to nitrogen and phosphorus. The control of phosphorus may be more manageable in artificial systems.

IMPLEMENTATION OF WETLAND TREATMENT SYSTEMS

To design wetland systems for the treatment of wastewater, information must be available on 1) treatment objectives, 2) usable system configurations, 3) the applicable design criteria, 4) the plant and animals, available locally, 5) the operational requirements, 6) resource and energy consumption, 7) the cost of facilities for each type of wetland system, and 8) related legal and environmental impacts. To the extent possible, each of these topics is considered briefly in the following discussion.

Treatment Objectives

The first step in implementing the use of wetlands for wastewater treatment is to establish the treatment objectives to be achieved. To date, the most common use of natural wetlands is for the advanced treatment of wastewater following conventional secondary treatment. Their use for the treatment of raw or primary wastewater is not well defined. As a consequence, this latter application should be approached with great caution.

At this time, based on a limited amount of operational data, the use of artificial wetlands for the treatment of primary effluent appears to be justified. The application of secondary effluent appears to be justified where nitrogen limits must be met. In the future, it is anticipated that artificial wetlands can be designed to be used with screened effluent.

System Configuration

System configuration refers to the location of the wetlands in the overall treatment flowsheet. The location of the wetlands will affect the design criteria and management techniques to be used. The application of artificial wetlands for the treatment of wastewater is shown in Figure 1. The applications shown in Figure 1 are arranged from the least to most complex. For example, in Figure 1 a wetland system would be used for the removal of nutrients, refractory organics, and heavy metals.

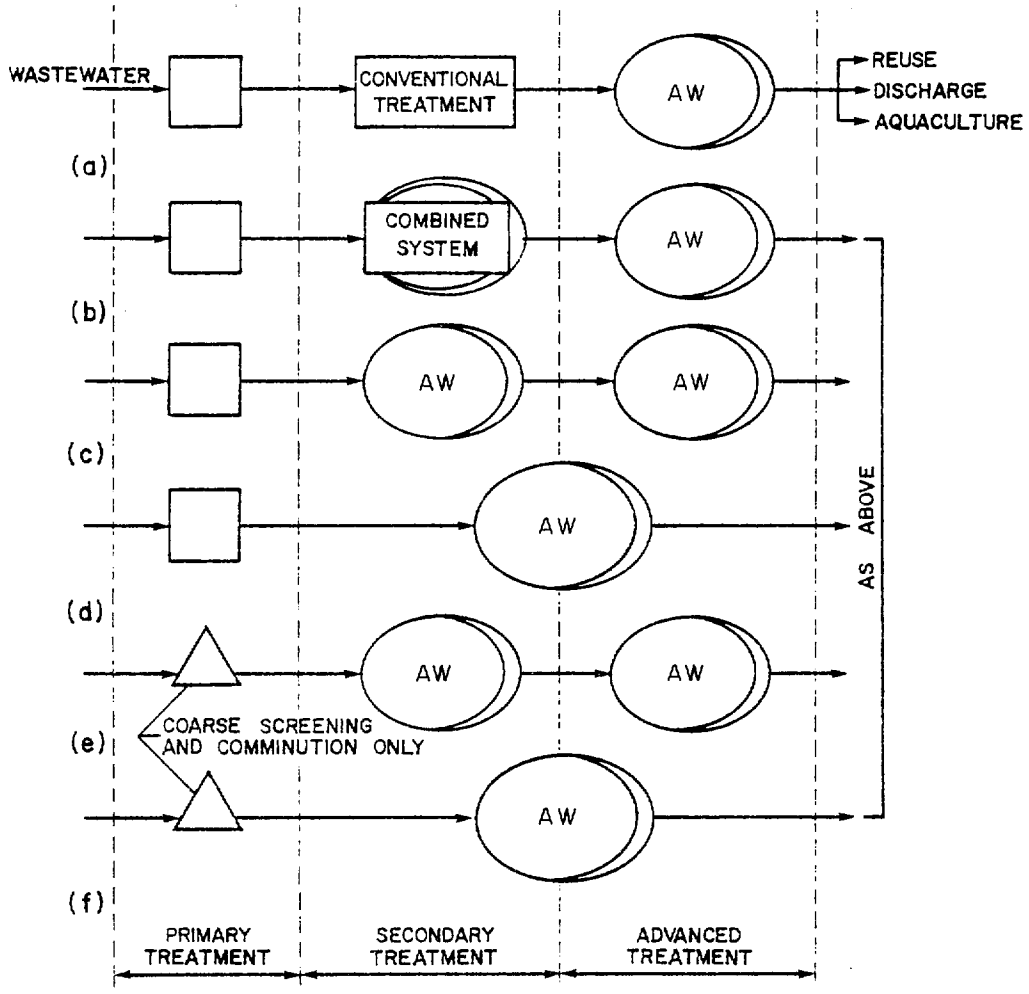

Figure 1

APPLICATION OF ARTIFICIAL WETLANDS (AW) FOR THE TREATMENT OF WASTEWATER (Adapted from Reference 26)

Design Criteria

At present, few if any design criteria are available that can be used to predict reliably the performance of natural wetlands or to determine the size of artificial wetlands.

Natural Wetlands Based on a review of the literature dealing with the use of natural systems for the treatment of secondary effluent all that can be said is that the area of land required is large, somewhere in the range of 30 to 60 acres per million gallons of wastewater applied per day. Even with these quantities of land, removal of nitrogen and phosphores are uncertain and may require even larger areas for significant removal. Because the climatology, hydrology, hydrogeology, geology, and biology of each natural wetland is so specific it may be necessary to conduct pilot studies at each location to establish the proper loading rates.

Artificial Wetlands Design criteria for artificial wetlands developed using data found in the literature, are presented in Table 7. The criteria presented are for the application of primary or secondary effluent. For a given wastewater the corresponding organic loading rates can be derived from the hydraulic loading rates. Where primary effluent is applied it is assumed that the removal of SS and BOD_5 are of principal concern. Where secondary effluent is applied it is assumed that nitrogen control is of prime concern, although some phosphorus will be removed.

Selection of Plants and Animals

In natural wetlands, plants and animals already present will affect the degree of treatment that can be achieved. In artificial wetlands, selection of plants and animals to be used will depend on their ability to remove, or to contribute to the removal of, the contaminants of concern under the conditions in which they are to operate. In general, plants that are available locally should be used. From what little factual information is available, it appears that an adequate stand of plants can be expected to develop within six to 12 months after planting. Compared to reeds and rushes, sedges require the shortest time to develop.

Operational Requirements

The operational requirements of wetland systems are related to the techniques that will be used to manage these systems. Some of the management techniques that have been used include seasonal application, inflow and outflow regulation, flushing, upland application, underground application, harvesting of vegetation, and chemical treatment (21). These and other management techniques are considered in more detail in the following section. Suffice it to say that the management technique(s) that will be used will impact the design and operation of wetland systems.

Energy and Resource Consumption

To assess the consumption of energy in natural and artificial wetlands, the activated sludge process, a conventional treatment system, will be compared to two artificial wetland systems. The difference between the two wetland

Table 7

PRELIMINARY DESIGN PARAMETERS FOR PLANNING ARTIFICIAL WETLAND WASTEWATER TREATMENT SYSTEMS[a]

Type of system	Flow regime[b]	Characteristic/design parameter: Detention time, d		Depth of flow, ft (m)		Loading rate $g/ft^2 \cdot d$ (cm/d)	
		Range	Typ.	Range	Typ.	Range	Typ.
Trench (with reeds or rushes)	PF	6-15	10	1.0-1.5 (0.3-0.5)	1.3 (0.4)	0.8-2.0 (3.25-8.0)	1.0 (4.0)
Marsh (reeds rushes, others)	AF	8-20	10	0.5-2.0 (0.15-0.6)	0.75 0.25	0.2-2.0 (0.8-8.0)	0.6 (2.5)
Marsh-pond							
1. Marsh	AF	4-12	6	0.5-2.0 (0.15-0.6)	0.75 (0.25)	0.3-3.8 (0.8-15.5)	1.0 (4.0)
2. Pond	AF	6-12	8	1.5-3.0 (0.5-1.0)	2.0 (0.6)	0.9-2.0 (4.2-18.0)	1.8 (7.5)
Lined trench	PF	4-20 (hr.)	6 (hr.)	--	--	5-15 (20-60)	12 (50)

[a]Based on the application of primary or secondary effluent.

[b]PF = plug flow, AF = arbitrary flow.

systems will be the type of pretreatment used: 1) conventional primary and 2) facultative ponds. It is assumed that the influent in each case is domestic wastewater with BOD_5 and SS equal to 220 mg/L. The effluent from each of the three treatment systems will meet the secondary requirements specified by EPA (BOD_5 and SS = 30 mg/L).

Energy and resource consuming functions for these three systems are summarized in Table 8. Where appropriate, important factors affecting the estimation of energy and resource consumption such as the total dynamic head and the chlorine dosage are also identified. Corresponding land requirements, labor requirements, parts and supplies costs, and capital costs are presented in Table 9.

The basic data and information used for adjusting costs and preparing energy consumption estimates are given in Table 10. In evaluating the energy consumption for the systems identified in Table 8, both primary and secondary energy were considered. The factors required to convert the cost of construction and parts and supplies to energy are also given in Table 10.

Estimates of energy and resource consumption for the three systems to be compared are given in Table 11. These estimates are based on the data and information presented previously in Tables 8, 9, and 10. Based on the data presented in Table 11, it appears that the consumption of energy in artificial wetlands treatment systems may be as low as 41 percent of that used for conventional activated sludge treatment. The corresponding value of natural wetlands systems would be lower. Ultimately, it may be possible to reduce the energy consumption to 10 or 15 percent of that for conventional treatment if screened domestic effluent can be applied directly to wetlands. Chlorine is the only resource consumed in the first two systems considered in this analysis. Note also that the secondary energy for the facultative pond + wetlands systems amounts to about 60 percent of the total energy consumed on an annual basis.

Cost of Wetland Treatment Systems

To assess the costs of wetland treatment systems, it will be instructive to compare the annual and unit costs for the systems identified previously (see Table 8). Such an analysis has been made and the results are presented in Table 12. Note that the cost of land is not included in the reported annual or unit costs. As shown, the primary + artificial wetland system is the least costly option. Even if the cost of land (without any salvage value) is considered, this option is still the least costly. For example, for a plant size of 1 mgd, if the cost of land is $4000/acre, the increase in the annual cost is $16,907; the total annual cost is $178,361 (16,907 + 161,457). The corresponding unit cost is $0.49/1000 gal, which is well below the unit cost of the activated sludge treatment process without land. At a cost of $10,000/acre, the unit cost becomes $0.56/1000 gal, which is still well below the cost of the activated sludge process.

Related Legal Environmental Impacts

In arid or semi-arid climates, there is the potential for significant consumptive use of water by wetlands vegetation. This will decrease ultimate downstream water discharges which maly adversely affect the water rights of others. Also, the salinity of the water may increase significantly.

Table 8

ENERGY AND RESOURCE CONSUMING FUNCTIONS IN SELECTED WASTEWATER TREATMENT SYSTEMS

AS+c[a]	P+AW+c[b]	FP+AW[c]
Influent pumping (TDH=12ft)	Primary	Facultative pond
Screening	Influent pumping (TDH=12ft)	Influent pumping (TDH=12ft)
Primary settling	Screening	Screening
Aeration, mechanical	Primary settling	Bldg heating, cooling
Secondary settling	Truck hauling of sludge	Vehicle operation (1500 gal/y)
Chlorination (10mg/L)	Landspreading	Misc, lighting, etc.
Thickening[d]	Bldg heating, cooling	Artificial wetland
Truck hauling of sludge	Vehicle operation (500 gal/y)	Pumping (TDH=12ft)
Landspreading	Misc, lighting, etc.	Vehicle operation (1500 gal/y)
Bldg heating, cooling	Artificial wetland	
Vehicle operation (2000 gal/y)	Pumping (TDH=12ft)	
Misc, lighting, etc.	Vehicle operation (1500 gal/y)	
	Chlorination (5 mg/L)	

[a]AS+c = activated sludge + chlorination.

[b]P+AW+c = primary + artificial wetlands + chlorination.

[c]FP+AW = facultative pond + artificial wetlands.

[d]Not included in plants with a capacity less than 1.0 mgd.

Table 9

LAND REQUIREMENTS
OPERATIONAL AND COST DATA FOR TREATMENT SYSTEMS IDENTIFIED IN TABLE 8[a]

ITEM	AS+c			P+AW+c			FP+AW		
	Plant size, mgd			Plant size, mgd			Plant size, mgd		
	0.1	0.5	1.0	0.1	0.5	1.0	0.1	0.5	1.0
Land required, acre	1.0	2.5	4.0	0.5[b]+ 4.0[d]	0.8[b]+ 20[d]	1.5[b]+ 40[d]	5[c]+ 4.0[d]	15[c]+ 20[d]	30[c]+ 40[d]
Labor, p•h/y	1,600	3,600	5,500	1,250	3,000	4,500	1,250	3,000	4,500
Parts and supplies, $/y	8,000	12,000	16,000	3,000	5,000	7,000	3,500	4,500	6,500
Capital cost, $ x 10^{-6}	0.71	1.23	1.60	0.37	0.55	0.90	0.49	1.12	1.80

[a]From Reference 28
[b]Area for primary treatment
[c]Area for facultative ponds
[d]Area for artificial wetlands

Table 10

BASIC DATA AND INFORMATION USED TO ADJUST COST DATA AND FOR ENERGY CONSUMPTION COMPUTATIONS[a]

Item	Value
Cost indexes[b]	
ENRCC Index	3,000[c,d]
EPA STP Index	334.1[e]
EPA O & M Index	2.54[f]
Bases for energy computations	
Mechanical equivalent of heat	3413 Btu/kW•h
Heat rate	$\frac{\text{heat supplied in fuel, Btu}}{\text{energy generated, kW•h}}$
	$\frac{\text{3413 Btu/kW•h}}{\text{conversion efficiency}}$
Heat rate used in report	10,800 Btu/kW•h[g]
Heating value for gasoline	124,000 Btu/gal[h]
Energy required for manufacture of chlorine	42×10^6 Btu/ton
Factor used to estimate secondary energy for construction	70,000 Btu/$ in 1963[i]
Factor used to estimate secondary energy for supplies and parts	75,000 Btu/$ in 1963[i]

[a]From Reference 28

[b]Reported values are for June 1979

[c]Basis for adjusting cost data given in this paper

[d]1913 = 100

[e]1957 - 1959 = 100

[f]1967 = 1.0

[g]Assumed conversion efficiency = 31.6 percent

[h]To convert the Btu value of gasoline to primary energy in terms of fuel oil, the given value must be multiplied by 1.208

[i]To use the reported conversion factors, current cost data must be converted to the equivalent cost in 1963. This conversion can be accomplished using the 1963 ENRCC index which was equal to 900.

Table 11

ENERGY AND RESOURCE CONSUMPTION ESTIMATES FOR TREATMENT SYSTEMS IDENTIFIED IN TABLE 8

ITEM	AS+c			P+AW+c			FP+AW		
	Plant size, mgd			Plant size, mgd			Plant size, mgd		
	0.1	0.5	1.0	0.1	0.5	1.0	0.1	0.5	1.0
Primary energy, Btu/yx10^{-6}[a]									
Electricity	367	1,447	2,560	130	432	799	65	292	562
Fuel	515	1,700	2,240	384	765	1,280	400	500	750
Secondary energy, Btu/yx10^{-6}									
Construction	746	1,292	1,680	389	578	945	515	1,176	1,890
Chemicals	64	320	640	32	160	320	--	--	--
Parts and supplies	180	270	360	68	113	158	79	101	146
Total, Btu/yx10^{-6}	1,872	5,029	7,480	1,003	2,048	3,502	1,059	2,069	3,348

[a]From Reference 28

Table 12

ANNUAL AND UNIT COSTS, EXCLUDING LAND, FOR TREATMENT SYSTEMS IDENTIFIED IN TABLE 8

ITEM	AS+c			P+AW+c			FP+AW		
	Plant size, mgd			Plant size, mgd			Plant size, mgd		
	0.1	0.5	1.0	0.1	0.5	1.0	0.1	0.5	1.0
Capital cost, $ x 10^{-6}	0.71	1.23	1.60	0.37	0.55	0.90	0.49	1.12	1.80
O & M cost, $/y									
Labor, $10/p•h	16,000	36,000	55,000	12,500	30,000	45,000	12,500	30,000	45,000
Power, $ 0.06/kW•h	10,400	27,940	41,556	5,572	11,378	19,456	5,883	11,494	18,600
Chlorine, $300/ton	457	2,283	4,566	228	1,142	2,283	--	--	--
Parts and supplies	8,000	12,000	16,000	3,000	5,000	7,000	3,500	4,500	6,500
Subtotal	34,857	78,223	117,122	21,300	47,520	73,739	21,883	45,990	70,100
Amortized capital (8% at 20 y)	72,313	125,275	162,960	37,684	52,962	91,655	49,905	114,072	183,330
Total annual cost, $	107,170	203,498	280,082	58,984	100,482	165,404	71,788	160,062	253,430
Unit cost, $/1000 gal	2.94	1.12	0.76	1.62	0.55	0.45	1.97	0.88	0.69

[a]Excluding the cost of the land.

MANAGEMENT OF WETLAND SYSTEMS

Proper management will be an important factor in the application of wetland treatment systems. While most management techniques are designed to improve performance, some are designed to maintain local environmental conditions; others are related to the use of the by-products from these systems. The effects of improper management must also be considered.

Management Techniques For Improved Performance

Techniques available for use in the management of wetland systems include pretreatment, seasonal application, outflow regulation, flushing, surface and subsurface application, and harvesting vegetation (21). For the most part, these management techniques are directed towards the improvement or control of the quality of effluent from wetlands.

Pretreatment The type and degree of pretreatment required will depend on the constituents to be removed. For example, if the effluent from the wetlands is to contain little or no phosphorus, it may be necessary to remove a portion of the phosphorus in the influent wastewater by chemical precipitation.

Seasonal Application Based on the results of full scale studies, it has been shown that it is possible to use wetlands as a temporary nutrient trap. Nutrients applied during the critical summer period could be stored and released in the winter during periods of high flow.

Outflow Regulation The hydraulic detention time can be controlled by regulating the depth of water in the wetland. This operational technique is especially important in the control of nitrogen through nitrification-denitrification, of seasonally released nutrients or for the treatment of toxic compounds.

Flushing Periodic flushing of a wetlands can be used to control the build up and/or release of specific constituents. For example, phosphorus could be flushed from the system during periods of high stream flow. In some cases, it may be desirable to pass silt laden water through the wetland to restore the adsorptive characteristics of the wetland.

Varying Points of Application By varying the surface or subsurface point(s) of wastewater application it may be possible to achieve improved removals for certain constituents.

Harvesting of Vegetation Harvesting of the biomass produced in wetlands can be an important factor in maintaining the removal capacity of the wetland. The time and extent of the harvesting will depend on the type of plants and the constituents of concern. In some cases, harvesting may not be compatible with other uses of the wetland(s), such as wildlife habitat.

Maintenance of Environmental Quality

In addition to techniques designed to improve performance, techniques must be developed to maintain the environmental quality of the wetlands.

Specifically, techniques must be developed to control 1) the breeding and growth of disease vectors, mosquitos, and flies; 2) the development of plants and animals considered to be pests; and 3) the development of odors.

Perhaps one of the most serious problems is the development of mosquitos. Recognizing this potential problem, some type of mosquito control program should be included in the development of any wetland treatment system. Natural control measures such as the use of mosquito fish appear to be most favored.

By-Product Recovery and Utilization

Depending on the quality of the wastewater that is applied, it may be possible to recover a useful by-product from a wetland treatment system. For example, rice which is grown in a marsh environment could be grown with wastewater. In many locations, harvesting of valuable crops could be an important added benefit of such systems.

Harvested biomass could be used in the production of livestock feed, compost, soil amendments, or energy. The economics of resource recovery will depend on the availability of local markets and uses for the products. Local consumption of these would reduce the need for expensive processing and transport equipment. When the economics of a resource recovery operation are favorable, criteria related to resource recovery should be considered in the design. Resource recovery should be considered carefully if its inclusion might diminish the performance or reliability of the aquatic treatment system.

Impact of Improper Management

In general, the improper management of natural or artificial wetlands will lead to a deterioration in effluent quality and in local environmental conditions. Water quality constituents affected most readily are nitrogen and phosphorus. For example, if a wetlands is overloaded with nitrogen and phosphorus; passage of the wastewater through the wetlands will have little or no effect on the concentration of these constituents in the effluent. However, even though nitrogen and phosphorus overloading can occur, it may have no effect on the removal of SS and BOD_5. Thus the impact of overloading or poor management will be specific for each constituent. The development of a habitat that may encourage breeding of undesirable disease vectors, mosquitos, and flies is the major environmental impact of improper management. The development of plants and animals considered to be pests is another impact.

WETLAND TREATMENT SYSTEMS: AN ASSESSMENT

The success and acceptance of wetland treatment systems will depend largely on how well they compare with conventional systems. Key factors that must be considered in an assessment of these systems include: 1) treatment efficiency and reliability, 2) availability of usable process design criteria and procedures, 3) availability of proven management techniques, 4) energy and resource consumption, 5) costs, and 6) health risks. Each of these factors is assessed in light of the material presented in the four preceeding sections. Finally, the question of the technology needed to make the use of wetlands a routine undertaking is addressed.

Treatment Efficiency and Reliability

Treatment efficiency and reliability are important factors in assessing the applicability of natural and artificial wetland systems for wastewater treatment.

Efficiency At the present time there are insufficient long-term performance data that can be used as a basis for making a thorough comparison between natural and artificial wetlands, and conventional secondary and advanced wastewater treatment facilities. Although spectacular removal efficiencies have been reported, they are either for a specific wetland system, or the results of short-term testing programs, or from systems that are so lightly loaded hydraulically and organically that they are not cost-effective. Nevertheless, there is ample evidence in the literature to support the thesis that the removal efficiencies that are possible for SS, BOD_5, trace organics, and heavy metals in both natural and artificial wetland systems will equal or exceed those achieved in conventional treatment systems. The conditions under which these efficiencies can be achieved in a cost-effective manner are at present undefined.

Reliability An important design consideration is system reliability (freedom from failures in treatment). Reliability problems in wetland treatment systems are related to changing climatic conditions, variable wastewater characteristics, local environmental factors, and disease that disturb, injure, or kill the microorganisms, plants, and animals used for treating the wastewater. In some regards, the potential for and consequences of poor system reliability is greater in wetland systems than in conventional systems because of greater environmental exposure. On the other hand, they may be less prone to upsets caused by errors in operator judgment. In summary, the statistical reliability of natural or artificial wetland treatment systems is undefined.

Availability of Process Design Criteria and Procedures

At the present time there are no reliable process design criteria or procedures for either natural or artificial wetland treatment systems. For this reason, the use of natural wetlands for the treatment of wastewater should be approached with great caution if this important habitat is not to be damaged. Even the use of general "rules of thumb" is unacceptable. Clearly, the opportunity to develop usable design and process application criteria is greatest with the artificial wetland systems.

Availability of Proven Management Techniques

Few, if any, proven operational techniques are available for the management of either natural or artificial wetlands. "Rules of thumb" are the order of the day for most systems. Nevertheless, as noted previously, there are potentially a great number of management techniques that are deserving of more study. Development of operable management techniques for artificial wetlands is a necessary objective.

Energy and Resource Consumption

Based on the data reported in Table 11, it is clear that significant savings can be achieved in the amount of energy and resources consumed for the

treatment of wastewater by using wetland systems. To achieve the ultimate savings that may be possible, it will be necessary to develop operating techniques that will allow for the direct application of screened wastewater to wetlands.

Costs

Proper assessment of the costs of wetland treatment must ultimately be based on properly designed full scale units. In this regard, it will be important to consider the total cost. This will include the capital and operating costs and the salvage value. Most of the capital costs of wetland systems will be in land which should have a high salvage worth.

With lesser mechanization, lower energy and resource consumption, (see Table 11), and the possibility of some resource recovery, operating costs should be lower for wetland systems as compared to conventional systems. Further, the useful life of wetland systems should be longer than for conventional systems. For these reasons, it may be feasible to build wetland systems with capital costs similar to, or even higher than, the costs of conventional systems. The societal benefits of using wetland systems that may not be cost-effective when evaluated by current methods should also be considered.

Depending on the site, wetland systems may have additional costs and/or benefits. Additional costs may include the control of vectors, such as mosquitoes, or other problems relating to the presence of marshlike environments, e.g. odor and fog generation. Beneficially, wetland systems may serve as recreation areas, wildlife habitat, or greenbelts.

Health Risks

Health risks for wetland systems are probably not higher than for conventional treatment. This is assuming that harvested plant tissue or animals are not used for human consumption and that potential vector problems are controlled. The public health hazards of direct consumption of organisms grown in domestic wastewater are very serious and complicated. Their use for animal feeds may be possible if the residues of heavy metals, trace organics, and pesticides meet state and federal regulations.

The Status of Wetlands Technology

While both natural and artificial wetland treatment systems represent an extremely attractive alternative to conventional secondary and advanced treatment, the technology involved in their application is not yet developed to the point where the use of these systems can be considered routine. These systems are currently considered by the USEPA to be included within the scope of the innovative and alternative technology provisions of Public Law 95-217. Based on information reviewed for this assessment, this classification is appropriate. Some of the needed research is identified in the following section.

RESEARCH NEEDS IN WETLAND TREATMENT

It is the purpose of this section to identify some of the data and information that must be developed so that the design of wetland treatment systems can become a rational undertaking. Because natural wetlands are site specific, they

are considered separately in the following discussion. It should be noted, however, that much of the information developed for artificial wetland systems should be useful in the development of methods that can be used to assess the performance of natural wetlands.

Natural Wetlands

Because the hydrology, hydrogeology, geology, and biology of most natural wetlands is unique, it will probably be necessary to conduct limited pilot scale testing before wastewater is applied. In time, as more experience is gained, it may be possible to develop some generalized design parameters that can be used to predict the removal efficiency for a given type of plant as a function of the biomass per unit area; the hydraulic, organic, and inorganic nutrient loadings; and temperature. Site specific variables could then be superimposed to develop a more complete analysis of the expected performance of the wetland. Experiments such as those described in the following section for artificial wetlands could be undertaken in controlled plots in natural wetlands.

Artificial Wetlands

The following are some of the important factors that must be quantified before the use of artificial wetlands can become a routine undertaking. Because all of the factors that must be defined for artificial wetlands are to interrelated it is suggested that the initial studies be conducted using no more than two or three plant species (reeds, rushes, and sedges).

1. Effect of plant type and biomass on degree of treatment achieved (e.g. reeds, rushes, sedges)
2. Effect of plant harvesting on nutrient uptake and degree of treatment
3. Effect of bottom substrate on plant uptake and degree of treatment
4. Effect of detention time on degree of treatment
5. Effect of seasonal conditions on the degree of treatment
6. Effect of humus and litter component on degree of treatment
7. Definition of removal kinetics as a function of plant type, biomass detention time, and temperature
8. Effect of wetland configuration on degree of treatment
9. Definition of steady-state constituent removal capacity and constituent holding capacity as a function of detritus accumulation

REFERENCES

1. Benemann, J.R., "Energy From Wastewater Aquaculture Systems," Paper presented at A Seminar On Aquaculture Systems For Wastewater Treatment, University of California, Davis, California, September 1979.

2. Cowadin, L. et al, "Interin Classification of Wetlands and Aquatic Habitats of the United States," U.S. Dept. of Interior, Fish and Wildlife Service, Washington, D.C. 1976

3. Crites, R.W., "Economics of Aquatic Treatment Systems," Paper presented at A Seminar On Aquaculture Systems For Wastewater Treatment, University of California, Davis, California, September 1979.

4. Demgen, F.C., "Wetlands Creation For Habitat and Treatment -At Mt. View Sanitary District, California," Paper presented at A Seminar On Aquaculture Systems For Wastewater Treatment, University of California, Davis, California, September 1979.

5. deJong, J., "The Purification of Wastewater With the Aid of Rush or Reed Ponds," Biological Control of Water Pollution. J. Tourbier and R.W. Pierson, Jr. (eds), University of Pennsylvania Press, Philadelphia, 1976.

6. Duffer, W.R. and J.E. Moyer, Municipal Wastewater Aquaculture, U.S. Environmental Protection Agency, EPA-600//2-78-110, Ada, Oklahoma 1978.

7. Farnham, R.S. and D.H. Boelter, "Minnesota's Peat Resources: Their Characteristics and Use in Sewage Treatment, Agriculture, and Energy," In Freshwater Wetlands and Sewage Effluent Disposal, D.L. Tilton, R.H. Kadlec, and C.J. Richardson (eds), The University of Michigan, Ann Arbor, Michigan 1976.

8. Feasibility Study of Wetland Disposal of Wastewater Treatment Plant Effluent, Draft Report to Commonwealth of Massachusetts, Water Resources Commission, Research Project 78-01, January 1979.

9. Fritz, W.R. and S.C. Helle, Cypress Wetlands For Tertiary Treatment, Boyle Engineering Corporation, Orlando, Florida, March 1979.

10. Fritz, W.R. and J.C. Helle, "Cypress Wetland: A Natural Tertiary Treatment Alternative," Water and Sewage Works, April 1979.

11. Good, R.E., D.F. Whigham, and R.L. Simpson (eds), Freshwater Wetlands Ecological Processes and Management Potential, Academic Press, New York 1978.

12. Grainge, J.W., "Use of Wetlands for Effluent Disposal from Small Communities and Settlements in Northern Canada," Personal Communication, November 1979.

13. Hartland-Rowe, R.C.B. and P.B. Wright, Swamplands For Sewage Effluents: Final Report, Environmental-Social Committee Northern Pipelines, Report No 74-4, Information Canada Cat. No R72-13174, #QS-1553-000-E-A1, Canada, May 1974.

14. Jankovska, V., "Development of Wetland and Aquatic Vegetation in the Trebon Basin Since the Late Glacial Period," Pond Littoral Ecosystems: Structure and Functioning, D. Dykyjova and J. Kvet (eds), Springer-Verlag, Berlin 1978.

15. Kadlec, R.H., "Wetland Tertiary Treatment at Hougton Lake, Michigan," Paper presented at A Seminar On Aquaculture Systems For Wastewater Treatment, University of California, Davis, California, September 1979.

16. Kadlec, R.H. (ed), Wetland Utilization for Management of Community Wastewater: 1978 Operations Summary, Wetland Ecosystem Research Group, University of Michigan, March 1979.

17. Kappel, B., "The Drummond Project: Applying Lagoon Sewage Effluent to a Bog - An Operational Trial," Paper presented at A Seminar On Aquaculture Systems For Wastewater Treatment, University of California, Davis, California, September 1979.

18. Lohman, L.C., "An Overview of the Legal, Political, and Social Implications of Wastewater Treatment Through Aquaculture," Paper presented at A Seminar On Aquaculture Systems For Wastewater Treatment, University of California, Davis, California, September 1979.

19. Mudroch, A. and J.A. Capobianco, "Effects of Treated Effluent on a Natural Marsh," Journal WPCF, Vol 51, No 9, September 1979.

20. Richardson, C.J. et al., "Nutrient Dynamics of Northern Wetland Ecosystems, " Freshwater Wetlands Ecological Processes and Management Potential, R.E. Good et al (eds) Academic Press, New York 1978.

21. Sloey, W.E., F.L. Spangler, and C.W. Fetter, Jr., "Management of Freshwater Wetlands For Nutrient Assimilation," Freshwater Wetlands Ecological Processes and Management Potential, R.E. Good et al (eds), Academic Press, New York 1978.

22. Small, M.M., "Wetland Wastewater Treatment Systems," in State of Knowledge In Land Treatment of Wastewater, H.L. McKim (coordinator), Proceedings of the International Symposium on Land Treatment, Vol 2, Hanover, N.H., August 1978.

23. Spangler, F., W. Sloey, and C.W. Fetter, "Experimental Use of Emergent Vegetation for the Biological Treatment of Municipal Wastewater in Wisconsin," Biological Control of Water Pollution, J. Tourbier and R.W. Pierson, Jr., (eds), University of Pennsylvania Press, Philadelphia 1976.

24. Spangler, F.L., W.E. Sloey and C.W. Fetter, "Wastewater Treatment by Natural and Artificial Marshes," EPA-600/2-76-207, 1976.

25. Stonlick, H.T., "Treatment of Secondary Effluent Using A Peat Bed," In Freshwater Wetlands and Sewage Effluent Disposal, D.L. Tilton, R.H. Kadlec, and C.J. Richardson (eds), The University of Michigan, Ann Arbor, Michigan 1976.

26. Stowell, R., G. Tchobanoglous, J. Colt, and A. Knight, The Use of Aquatic Plants and Animals For the Treatment of Wastewater, Departments of Civil Engineering and Land, Air, and Water Resources, University of California, Davis, September 1979.

27. System For Purification of Polluted Water, U.S. Patent No 3,770, 623, U.S. Patent Office, November 6, 1973.

28. Tchobanoglous, G., J.E. Colt, and R.W. Crites, "Energy and Resource Consumption in Land and Aquatic Treatment Systems," Paper presented at the Energy Optimization of Water and Wastewater Management for Municipal and Industrial Applications Conference, Sponsored by Department of Energy Urban Waste and Municipal Systems Branch, New Orleans, Louisiana, December 10-13, 1979.

29. Tilton, D.L., R.H. Kadlec, and C.J. Richardson (eds), "Freshwater Wetlands and Sewage Effluent Disposal," Symposium proceedings, The University of Michigan, Ann Arbor, Michigan 1976.

30. Tourbier, J. and R.W. Pierson (eds) Biological Control of Water Pollution, University of Pennsylvania Press, Philadelphia 1976.

31. Ulehlova, B., "Decomposition Processes in the Fishpond Littoral," Pond Littoral Ecosystems: Structure and Functioning, D. Dykyjova and J. Kvet (eds), Springer-Verlag, Berlin 1978.

32. Wesner, G.M. et al, Energy Conservation in Municipal Wastewater Treatment, MCD-32, EPA 430-9-77-011, Washington, D.C., March 1978.

33. Whigham, D.F. and R.L. Simpson, "The Potential Use of Freshwater Tidal Marshes in the Management of Water Quality in the Delaware River," Biological Control of Water Pollution, J. Tourbier and R.W. Pierson, Jr. (eds), University of Pennsylvania Press, Philadelphia 1976.

34. Williams, T.C. and J.C. Sutherland, "Engineering, Energy, and Effectiveness Features of Michigan Wetland Tertiary Wastewater Treatment Systems," Paper presented at A Seminar On Aquaculture Systems For Wastewater Treatment, University of California, Davis, California, September 1979.

35. Yonika, D.A., "Effectiveness of a Wetland in Eastern Massachusetts in Improvement of Municipal Wastewater," Paper presented at A Seminar On Aquaculture Systems For Wastewater Treatment, University of California, Davis, California, September 1979.

36. Zoltec, J., et al, "Removal of Nutrient From Treated Municipal Wastewater By Freshwater Marshes," Center for Wetlands, University of Florida, Gainsville, Florida, September 1978.

AQUATIC PLANT PROCESSES ASSESSMENT

E. Joe Middlebrooks

Introduction

A summary of the known water hyacinth systems that were constructed or modified to treat wastewater are summarized in Table 1. There are few consistencies in the design criteria used or developed during the evaluation of these systems. Water hyacinth wastewater treatment systems are used to treat raw wastewater as well as effluents from various stages of treatment. The most common system incorporates a stabilization pond followed by series-type water hyacinth culturing tanks. The design characteristics of hyacinth systems are discussed in this report.

Conclusions and Recommendations

1. The water hyacinth wastewater treatment process appears to be applicable in warm temperate and tropical climates, and adequate data appear to be available to assist in the design of a system capable of producing an advanced secondary effluent.
2. Water hyacinths thrive in municipal wastewaters and appear to do well in mixtures of municipal and industrial wastewaters.
3. A hydraulic loading rate of 2,000 m^3/ha·day to a hyacinth system appears reasonable when treating secondary wastewater treatment plant effluent if nutrient control is not an objective. When treating raw wastewater in a hyacinth system, a hydraulic loading rate of 200 m^3/ha·day appears reasonable if nutrient control is not an objective.

4. A shallow hyacinth pond ($\leqq$ 0.4 m) and a hydraulic loading rate of approximately 500 m^3 of stabilization pond effluent per hectare per day should produce an effluent containing a total nitrogen concentration of less than 2 mg/l.
5. Total phosphorus removals of approximately 50 percent are normal with a hyacinth system.
6. Considerable experimentation remains to be performed before phosphorus control with hyacinth systems can be accomplished.
7. Dye studies should be conducted to determine the actual hydraulic residence times in hyacinth systems.
8. Algae growth appears to be controlled in hyacinth systems by simple shading by the plant.
9. Nutrient removal in hyacinth systems is more complex than plant uptake alone. Excellent nitrogen and phosphorus reductions occur in wastewater stabilization ponds without water hyacinths.
10. Sludge accumulation in hyacinth systems does not appear to be a significant problem.
11. Harvesting and utilizing the water hyacinth after harvesting requires considerable investigation to develop satisfactory methods and procedures.
12. The use of more cold tolerant plants such as duckweed should be investigated more extensively.
13. More extensive investigations should be conducted on the range of organic and hydraulic loading rates that the hyacinth system is capable of treating particularly with systems processing raw wastewater.

Table 1. Summary of design and performance characteristics of aquatic weed wastewater treatment systems.

Location	Type of Pretreatment	Surface Area of Hyacinth Pond ha	Depth of Hyacinth Pond m	Hydraulic Loading Rate m^3/ha	Hydraulic Residence Time Days	Organic Loading Rate kg/ha·day	Percent Hyacinth Cover %	Nutrient Conte of Plants, % Dry Weight TKN	T
Nat. Space Tech. Lab	None	2	1.22	240	54	26		2.73	0.4
Before Hyacinths									
After Hyacinths							100		
Lucedale, Miss.	None	3.6	1.73	260[a]	∿67[a]	44		3.56	0.8
Before Hyacinths									
After Hyacinths							100		
Orange Grove, Miss.	2-Aerated 3-Facul. in parallel Exp conducted in parallel systems	0.28	1.83	3,570	6.8	179		3.74	0.8
Without Hyacinths									
With Hyacinths							100		
Cedar Lake, Miss. (Duckweed)	1-Aerated and Facultative	0.07	1.5	700	22	31	Duckweed 100	-	-
Williamson Creek, Tx									
Phase I	Plant A Aeration Basin, Clarifier, 3 Lagoons in series	0.0585	1.0	1,860	5.3	43	100	-	-
Phase II	Plant B 2-Aeration Basins in Parallel, 3-lagoons		0.85	1,860	4.5	89	100	-	-
Full-Scale	Plant A' Aeration Basin, Clarifier, two lagoons (1.2 ha each) in series	1.2	0.7 - 1.3	1,100-1,400	6-9	56-72	100	-	-
Austin-Hornsby Bend, Texas	Excess Act. Sludge Lagoons Overflow to Hyacinth Pond	1.4	1.23	430	∿3	-	100		
San Juan, Texas	Aerated Lagoon, Stabilization Pond	1.0 (2 hyacinth of 1.0 ha, only 1 in operation)	0.61 0.91 0.91 1.37	870 850 1,550 1,860	∿7 ∿11 ∿6 ∿7	-	100		
Alamo, Texas	Imhoff Tank, Trickl. Filter Aeration Basin Two 4.04 ha Stab. Ponds in Parallel	Two Basins 1.35 1.05							
Before Hyacinths									
After Hyacinths							<25		
San Benito, Texas	Stab. Pond, 4 Ponds in Series	3 in series, 0.8, 0.8, & 2.0		3,100;3,100, & 1,200 (overall system 0.068)			1st - 0		
Before Hyacinths							2nd - 50		
After Hyacinths				680			3rd - 100		
Rio Hondo, Texas	None	3 in series 0.41, 0.41, & 0.41		1,110; 1,110 1,110		Basin 1, 197			
Lakeland, Florida	Secondary Treatment	3 in series, 0.40, 0.40, & 0.40							
Walt Disney World, Florida		3 exp. basins 8.84 × 109.8 m	Var. 0.38, 0.61 & 0.91 m	650 to 7,850					
Coral Springs, Florida	Activated Sludge Effluent	5 in series, 0.18, 0.08, 0.08, 0.08, & 0.08	0.38	870	6 2, 1, 1, 1, 1	Basin 1, 31	100		

[a]Based on effluent flow rate.

Biochemical Oxygen Demand, mg/ℓ		Suspended Solids mg/ℓ		Total Nitrogen mg/ℓ		Total Phosphorus mg/ℓ		Effluent Dissolved Oxygen mg/ℓ	Effluent pH Values Units	Sampling Period and Comments	Reference
Influent	Effluent	Influent	Effluent	Influent	Effluent	Influent	Effluent				
91 110	17 7	70 97	49 10	9.8 12.0	5.2 3.4	2.9 3.7	2.1 1.6	6.9 2.3	9.3 7.1	5-74 to 5-76 6-76 to 9-77	Wolverton and McDonald [1979] and Wolverton [1979]
127 161	57 23	140 125	77 6					0		Odors at night	Wolverton [1979]
50 50	37 14	49 49	53 15					2.0			Wolverton [1979]
44	18	188	11					0.5			Wolverton [1979]
23	5	43	7	8.2	2.5						Dinges [1978] and Dinges [1979]
46	6	117	8	9.9	3.6						Dinges [1978] and Dinges [1979]
42	12	40	9							10-77 to 8-79	Dinges [1978] and Dinges [1979]
										No change at loading rates used	Dinges [1979]
-	20 9 35 31		30 11 30 32							4-78 to 3-79	Dinges [1979]
	33 38-50		86 68-82							4-78 to 3-79 5-79, 6-79	Dinges [1979]
	17 17		35 20							4-78 to 3-79 6-79	Dinges [1979]
	16		24							7-78 to 5-79	Dinges [1979]
					Only partial cover and limited preliminary data						Stewart [1979]
					Experimental units not fully operational						Kruzic [1979]
13	3		3	22.4	1.0	11.0	3.6			3-79 to 5-79	Swett [1979]

14. Mosquito control is essential in hyacinth wastewater treatment systems.

15. Water hyacinths must not be introduced into areas where it does not currently grow.

16. Consideration should be given to conducting a greenhouse experiment with water hyacinths in a cold climate. Partial temperature control and carbon dioxide enrichment utilizing gases produced with the harvested plants in anaerobic fermentation systems may make a greenhouse system viable and economical.

Physical Characteristics

Location. All of the water hyacinth systems that are currently treating wastewater are located in tropical or warm temperate climates. The water hyacinth is very sensitive to temperature and does not grow in water with a temperature of $10^{o}C$ or lower. The optimum temperature for water hyacinth growth ranges between 21 and $30^{o}C$. If a water hyacinth system were to be used in a colder climate, it would be necessary to house the system in a greenhouse and maintain the temperature in the range of the optimum. There are possibilities of utilizing methane produced from harvesting the plant to produce heat to partially control the temperature and carbon dioxide to enrich the environment above the plants. The benefits of such a system must be investigated on a large scale to establish the economics as well as the operational problems.

Based upon the limited data available, it appears that it would be uneconomical to attempt to develop a water hyacinth wastewater treatment system in cold regions. Even if the system were selected to operate only during the warmer months of the year in the cold region, it would

be necessary to provide a culturing unit to maintain a hyacinth crop for introduction into the system in the spring. It is likely that hauling a culture of hyacinths to a relatively large system would be prohibitive, and the cost of maintaining a culture remains to be determined. Introduction of the hyacinth plant to areas where it does not currently grow must be avoided. The damages from an infestation of hyacinth plants would far exceed the benefits derived in wastewater treatment.

Wastewater Characteristics. Many domestic wastewaters have been applied to water hyacinth systems, and hyacinths thrive in wastewaters because of the high nutrient content normally available. The hyacinth has also been grown in mixtures of industrial waste and municipal wastewaters. The growth of hyacinths has been very good in these mixtures. There is limited experience with projects using hyacinths to treat just industrial wastes. Hyacinth systems have the capability of removing heavy metals and other difficult-to-remove organics. This ability to remove the materials might be a significant disadvantage. The presence of toxic substances would make the disposal of the solid material difficult and expensive and would prohibit the use of the plant material as a feed supplement. High accumulations of heavy metals might also interfere with the anaerobic digestion of the solid materials to produce methane as a source of energy.

Water hyacinths thrive in municipal wastewater and can survive in relatively high concentrations of heavy metal contaminants. The impact of heavy metals and toxic organics has not been investigated to any significant degree.

Size. All of the water hyacinth wastewater treatment systems presently operating are less than four hectares in surface area, and

the majority of the systems are less than one hectare in surface area. The majority of the systems currently in operation are experimental systems and even the ones that are serving a community are still classified as being in the experimental stage.

The recommendation by Dinges (1979) that individual water hyacinth wastewater treatment systems be kept to a surface area of 0.4 hectare appears reasonable, and this size selection is based on the convenience of harvesting the water hyacinths and cleaning the basins periodically. However, long rectangular basins would not necessarily be limited by this constraint.

The depth of the hyacinth pond varies from location to location. Depths vary from 0.38 to 1.83 meters with the majority of the investigators recommending a depth of 0.91 meters or less. The critical concern is to provide adequate depth for the root system to penetrate through the majority of the liquid flowing through the hyacinth pond. Systems that have been designed for nutrient removal have been designed at a depth of approximately 0.4 meter to ensure complete contact of the wastewater with the root system.

Hydraulic Loading Rates. The hydraulic loading rates applied to water hyacinth facilities have varied from 240 m^3/ha·day up to 3,570 m^3/ha·day when treating domestic wastewaters. Higher hydraulic loading rates have been applied to the Austin-Hornsby Bend, Texas, hyacinth system treating overflow from a lagoon receiving excess activated sludge, but this treatment process was ineffectual because of high organic and hydraulic loading rates. The Disney World, Florida, system was designed to process hydraulic loading rates between 650 and 780 m^3/ha·day, and once these experiments are completed a better set of design criteria can be

presented for design of hyacinth systems to be used principally as polishing device for secondary treatment processes.

Based upon the results currently available, it appears that an hydraulic loading rate of 2,000 m^3/ha·day when treating secondary effluent will produce an effluent quality that would satisfy advanced secondary standards (BOD_5=<10 mg/l; SS=<10 mg/l; TKN=<5 mg/l; and TP=<5 mg/l). Hydraulic loading rates applied to three water hyacinth systems treating raw wastewater have ranged from 240 to 680 m^3/ha·day. All three of the systems operated effectively, but the lower hydraulic loading rates appear to produce a higher quality effluent measured in terms of BOD_5 and suspended solids concentrations.

A reasonable design hydraulic loading rate for a hyacinth system receiving raw wastewater appears to be approximately 200 m^3/ha·day. There are few data supporting this decision, but an analysis of the available data would support this lower hydraulic loading rate for systems treating raw wastewater. Hyacinth systems processing a secondary effluent could be designed to process approximately 2,000 m^3/ha·day if the principal objective was the control of BOD_5 and suspended solids in the effluent. With nutrient removal as the principal objective, little data exists as to what might be the best hydraulic loading rate. A nutrient removal hyacinth system probably would be used in conjunction with a wastewater stabilization pond or another secondary effluent would be applied. A shallow pond (0.4 meters) and a hydraulic loading rate of approximately 500 m^3/ha·day should produce good nitrogen removals (<2 mg/l). Approximately 50 percent reduction in the total phosphorus concentration could be expected.

Number of Units in System. The majority of the water hyacinth systems have been designed to operate with 3 cells in series. Single cell stabilization ponds with water hyacinths have been employed successfully, but the majority of the systems currently being evaluated are considering the nutrient removal aspects of the hyacinth systems, and the 3-cells in series system appears to be preferred. If the objective is the control of algae in the effluent from a wasteater stabilization pond, it is likely that the single unit would work just as effectively as the series configuration. It appears that the control of the algae in wastewater stabilization pond effluents is principally a physical process of shading sunlight.

Active Components. In a water hyacinth system, during the active growth phase, hyacinths are capable of sorbing organics, heavy metals, pesticides and other organic contaminants. The root system of the water hyacinth also supports a very active mass of organisms which assist in breaking down and removing the pollutants in wastewaters. As mentioned above, the control of algae in wastewater stabilization pond effluent by the introduction of water hyacinths appears to be a physical process by limiting the light available to the algae. Nutrient removal apparently is a result of hyacinth growth, physiochemical reactions, and accumulation by other organisms growing in the ecosystem.

Organic Loading Rates. Water hyacinth wastewater treatment systems processing raw wastewater in a stabilization pond appear to be able to process wastewater organics at approximately the same loading rates used in lightly loaded wastewater stabilization ponds. The system operating at the National Space Technology Laboratories (NSTL) was loaded at 26 kg of BOD_5/ha·day and operated without significant odors, whereas the

system also processing raw wastewater at the Lucedale, Mississippi, location was loaded at 44 kg/ha·day and odors developed at night. These results indicate that organic loading rates of less than 30 kg/ha·day would provide satisfactory results when processing a raw wastewater. Only three systems are known to be processing raw wastewater, and operational data from one of these (Rio Hondo, Texas) were extremely limited.

Water hyacinth wastewater treatment systems receiving secondary effluents or wastewater stabilization pond effluents are more numerous, and a much wider range of organic loading rates have been employed with these systems. Organic loading rates applied to the first basin in hyacinth systems have ranged from 197 kg/ha·day to 31 kg/ha·day. All of the systems receiving organic loading rates within this range have produced an effluent which would satisfy the secondary standards of 30 mg/l of BOD_5 and suspended solids. In addition significant reductions in the total nitrogen concentrations entering the hyacinth system have also been reported. However, the data are limited except for the Williamson Creek, Texas, National Space Technology Laboratories and the Coral Springs, Florida, experiments. These studies show significant reductions in total nitrogen as well as total phosphorus. Unfortunately, the phosphorus concentrations were not reduced to the desired level of less than 1 mg/l at the Coral Springs, Florida, operation, and total phosphorus concentrations were not measured at the Williamson Creek, Texas, experiments. Considerable experimentation remains to be done before phosphorus control with hyacinth systems can be fully evaluated.

Hydraulic Detention Time. With the exception of the Williamson Creek, Texas, phase 1 experiment, all of the other studies with water hyacinth systems reporting hydraulic retention times are based upon

theoretical calculations. The degree to which the actual hydraulic residence time approaches the theoretical depends upon the care with which the original design was carried out. Systems consisting of long, narrow rectangular channels probably approach a ratio of actual to theoretical hydraulic detention time of 0.75 as a rough approximation. The circular or free-form ponds and systems adapted to water hyacinths probably have a ratio of actual to theoretical hydraulic detention time of 0.5 or less. All experiments that are presently being conducted should definitely incorporate a dye study to evaluate the actual hydraulic residence time in the hyacinth system.

Engineering Criteria

The application of water hyacinth systems to treat wastewater is limited to tropical and warm temperate climates. It is unlikely that such a system can be economically adapted to cold regions successfully. Greenhouses and plant digestion to produce methane for partial heating and carbon dioxide enrichment are theoretical possibilities, but with the absence of experience in this area, it is impossible to recommend such a system for cold regions. A large scale research project in a cold climate would be necessary to answer the majority of the questions involving the use of plant systems in cold regions. Many suggestions have been made that a more cold tolerant plant such as duckweed be considered for cold climates. However, duckweed would not survive the low temperatures and ice cover in the northern U.S. Winter protection or only warm weather use of the plants would be necessary. Duckweeds, in theory, offer a greater geographical range and longer operational season when compared to hyacinths. It is possible that such a system would

work, but again there are no data available to prove that the system will operate in cold climates or on which to base engineering design criteria.

In areas with warm temperate climates, the application of water hyacinth wastewater treatment technology appears to be feasible. The system is based upon essentially the same criteria utilized in design of wsatewater stabilization ponds. Frequently a water hyacinth system is installed in an existing wastewater stabilization pond.

The role of hyacinths in algae control appears to be that of a light screening function that controls algae growth. Wolverton (1979) has presented results supporting the sorption of nutrients and pollutants by hyacinths, but significant nitrogen and phosphorus reductions occur in lagoons without hyacinths. Numerous reports summarize nitrogen and phosphorus removals by lagoon systems with total nitrogen removals frequently exceeding 70 percent and total phosphorus removals exceeding 50 percent without hyacinths. Nutrient reductions in hyacinth systems is far more complicated than plant uptake alone.

If the water hyacinth system is used to remove nutrients, it is necessary to maintain the hyacinth culture in an active growth phase which means that harvesting must be conducted frequently. There is still need for definition as to what the proper harvesting schedule should be. With intensive harvesting, it is necessary to construct the hyacinth ponds so that harvesting can be easily accomplished. This has a tendency to increase the cost of the hyacinth system, and also develops the problem of disposing of the excess material. Most of the cost data associated with the harvesting and processing of hyacinth plants is based on small scale experiments (Bagnall, 1979). These small scale experiments indicate that the cost for harvesting and processing will be expensive, but

perhaps not prohibitive. In systems such as those recommended by Dinges for use in Texas, where harvesting is recommended only once each year, the cost would be far more attractive.

Sludge accumulation information is very limited for hyacinth systems, but the experimental systems and the full scale system utilized at Williamson, Texas, indicate that a sizable mass of sludge accumulates in the course of a year. With multiple cell hyacinth systems it is likely that one pond could be drained and cleaned while the other ponds assume the total loading. It is unlikely that much of an upset would occur with this type operation. Therefore, it would be possible to drain the hyacinth ponds completely and allow the materials to dry in place before removing the materials. Whether this would be the most satisfactory method of cleaning and ponds or not depends upon the degree of sophistication an engineer may choose to design into the system. There are numerous harvesting opportunities described in the literature, and as mentioned above, there is too little data at this time to select an optimum harvesting and utilization technique. Basing calculations upon one cleaning and harvesting per year, it is very unlikely that the cost associated with this would be prohibitive, and when nutrient control is not a consideration, this is probably the best approach to disposing of the accumulated sludge and plants.

When a hyacinth system is combined with wastewater stabilization pond technology in warm climates, it is an attractive system for the production of an advanced secondary effluent. The system can be efficient and economical and it requires very little energy for operation. When properly designed and operated, the system apparently does not have an odor problem and can be aesthetically attractive. During the active

growing system, the evapotranspiration losses from hyacinth systems can approach half of the flow entering the system. The rate of evapotranspiration varies widely and is directly related to the rate of growth of the water hyacinth. In a water-short area such as Arizona and parts of California, this evapotranspiration could be significant and may make the process unattractive because of the loss of water.

In summary, the water hyacinth wastewater treatment process appears to be applicable in warm temperate and tropical climates, and adequate data appear to be available to assist in the design of a system capable of producing an advanced secondary effluent. The recommended design criteria for such a system are summarized in Table 2. These design data are based upon the work of the individuals referred to in Table 1. Similar design criteria developed by Dinges (1979) for the State of Texas also appear reasonable.

By-Product Recovery

The literature on water hyacinths as a wastewater treatment process contains considerable speculation on the use of the water hyacinth upon harvesting. Composting, anaerobic digestion for the production of methane, and the fermentation of the sugars into alcohol are techniques proposed as a means to cover the costs of wastewater treatment (Benemann, 1979). All of these techniques may have application in limited areas; however, it is very unlikely that a production system will be developed in the near future which would even approach paying for the treatment of the wastewater (Crites, 1979). One cannot deny the possibility of reclaiming a product, but at this stage of development, it is very unlikely that the recovery of useful products from water hyacinth wastewater treatment will be economically viable.

Table 2. Design criteria for water hyacinth wastewater treatment systems based upon best available data and to be operated in warm climates.

Parameter	Design Value		Expected Effluent Quality
	Metric	English	
A. RAW WASTEWATER SYSTEM			
(Algae Control)			$BOD_5 \leqq 30$ mg/l
Hydraulic Residence Time	> 50 days	> 50 days	SS $\leqq 30$ mg/l
Hydraulic Loading Rate	200 m^3/ha·day	0.0214 mgad	
Depth, Maximum	≦ 1.5 meters	≦ 5 feet	
Area of Individual Basins	0.4 hectare	1 acre	
Organic Loading Rate	≦ 30 kg BOD_5/ha·day	≦ 26.7 lbs BOD_5/ac·day	
Length to Width Ratio of Hyacinth Basin	> 3:1	> 3:1	
Water Temperature	> 10°C	> 50°F	
Mosquito Control	Essential	Essential	
Diffuser at Inlet	Essential	Essential	
Dual Systems, Each Designed to Treat Total Flow	Essential	Essential	
B. SECONDARY EFFLUENT SYSTEM			
(Nitrogen Removal and Algae Control)			$BOD_5 \leqq 10$ mg/l
Hydraulic Residence Time	> 6 days	> 6 days	SS $\leqq 10$ mg/l
Hydraulic Loading Rate	800 m^3/ha·day	0.0855 mgad	TP $\leqq 5$ mg/l
Depth, Maximum	0.91 meter	3 feet	TN ≦ 5 mg/l
Area of Individual Basins	0.4 hectare	1 acre	
Organic Loading Rate	≦ 50 kg BOD_5/ha·day	≦ 44.5 lbs BOD_5/ac·day	
Length to Width Ratio of Hyacinth Basin	> 3:1	> 3:1	
Water Temperature	> 20°C	> 68°F	
Mosquito Control	Essential	Essential	
Diffuser at Inlet	Essential	Essential	
Dual Systems, Each Designed to Treat Total Flow	Essential	Essential	
Nitrogen Loading Rate	≦ 15 kg TKN/ha·day	≦ 13.4 lbs TKN/ac·day	

Removal of Pollution

The greatest difficulty in interpreting the data presented by the various papers describing the work with water hyacinth systems is the infrequency of sampling and the lack of 24-hour composite samples. Although many of the studies include relatively large numbers of samples, most are grab samples collected twice each week. Even with large numbers of samples, it is still possible to make sizable errors in predicting the performance of a wastewater treatment system. Only the data for the Coral Springs, Florida, system are based upon 24-hour or 48-hour composite samples. All others are grab samples collected at various frequencies. The performance of typical water hyacinth systems is summarized in Table 1.

The most complete nutrient removal data were collected at the Williamson Creek, Texas, Phase 1 and Phase 2 experiments and at the Coral Springs, Florida, water hyacinth treatment facility. The organic loading rates, nutrient loading rates and removals obtained during these three studies are summarized in Table 3. The lowest total nitrogen loading rate occurred at the National Space Technology Laboratories (NSTL) experimental water hyacinth facility, but the effluent quality at the NSTL facility was no better than that experienced at the Williamson Creek facility. A higher percentage of phosphorus removal was experienced at the Coral Springs, Florida, facility than at the NSTL facility. The total phosphorus effluent concentration at the NSTL was lower than that at the Coral Springs, Florida, effluent. However, the influent total phosphorus concentration at Coral Springs, Florida, was approximately three times greater than that at the NSTL facility. These differences are possibly due to the influence of the low concentrations

Table 3. Summary of nutrient loading rates applied to water hyacinths wastewater treatment systems.

Location	Organic Loading Rate kg BOD_5/ha·day	Nutrient Loading Rates to First Unit		Nutrient Removal, %		Comments
		kg TN/ha·day	kg TP/ha·day	TN	TP	
Williamson Creek, Texas						
Phase I (109 m^3/d)	43	15.3	-	70	-	Single Basin, surface area = 0.0585 ha
Phase II (109 m^3/d)	89	18.5	-	64	-	Single Basin, surface area = 0.0585 ha
Coral Springs, Florida	31	19.5	4.8	96	67	Five Basins in Series Total surface area = 0.52 ha
National Space Technology Labs	26	2.9	0.9	72	57	Single Basin Receiving Raw Wastewater, Surface area = 2 ha

being applied at the NSTL facility. In general, higher percentage removals are experienced with higher concentrations. In addition harvesting at the NSTL facility was not conducted at a frequency to optimize nutrient removal.

Sludge Accumulation

Very little data are presented in the water hyacinth studies showing the quantities of sludge that accumulate during the rapid growth of plants. The only measurements of sludge accumulation reported were for the pilot plant and full scale studies at Williamson Creek, Texas. In the pilot studies the sludge accumulation was measured after the material dried, and in the full scale operation, the sludge was measured while wet. The area covered by the sludge was not reported in either case and only the depth of the sludge was apparently measured. However, the dimensions of both the pilot and the full scale facility were given, and making reasonable assumptions, the quantities of sludge that accumulated were estimated to be between 1.5 and 8 x 10^{-4} m^3 of sludge/m^3 of wastewater treated. This compares to 1.8 x 10^{-3} m^3 of sludge/m^3 of wastewater treated for conventional primary stabilization ponds (Middlebrooks et al., 1965).

The quantities of sludge accumulated per cubic meter of wastewater treated in the pilot plant were approximately five times less than that estimated in the full scale unit. However, because of the lack of accurate measurement for the quantity of sludge accumulated, these estimates are the best available. Regardless of which figure is used to estimate sludge production, it is apparent that the rate of sludge accumulation in a hyacinth growth basin is relatively slow and by cleaning the systems once each season, as recommended by Dinges (1979),

would probably be adequate to prevent the passing of solids out of the system. Compared with the accumulation of plants in the system, the mass of sludge would be relatively insignificant and could easily be disposed of along with the harvested hyacinths.

Hydraulics of Triangular Basins

Dinges (1979) has recommended that rectangular basins with a length-to-width ratio of 3 to 1 be constructed and then divided into two triangles to improve the hydraulic characteristics of the hyacinth basin. Such a design would result in an increase in cross-sectional velocity as the wastewater flowed toward the apex of the triangle. A preliminary hydraulic analyses of the triangular basin concept indicates that the use of such a hydraulic design should be approached with caution since small organic particles near the overflow weir may be washed out of the basin. Before installing such a system, a more detailed hydraulic analysis should be conducted.

Mosquito Control

Various experiences with mosquito problems at water hyacinth wastewater treatment systems are reported by the investigators listed in Table 1. Although some investigators did not encounter a mosquito problem, all recommended that some means of mosquito control be incorporated into the design of such a facility. Most investigators recommended that natural control measures be employed such as the mosquito fish (*Gambusia*). In quiescent bodies of water, the growth of mosquito larvae is encouraged; therefore, it appears imperative that control measures be incorporated into hyacinth wastewater treatment systems.

REFERENCES

Bagnall, L. O. 1979. Resource Recovery from Wasteawater Aquaculture. Presented at the Seminar on Aquaculture Systems for Wastewater Treatment, 11-12 September 1979, University of California, Davis.

Benemann, J. R. 1979. Energy from Wastewater Aquaculture Systems. Presented at the Seminar on Aquaculture Systems for Wastewater Treatment, 11-12 September 1979, University of California, Davis.

Camp, T. R. 1946. Sedimentation and the Design of Settling Tanks. Transaction, ASCE, 111.

Crites, R. W. 1979. Economics of Aquatic Treatment Systems. Presented at the Seminar on Aquaculture Systems for Wastewater Treatment, 11-12 September 1979, University of California, Davis.

Dinges, Ray. 1978. Upgrading Stabilization Pond Effluent by Water Hyacinth Culture. Journal Water Pollution Control Federation, 50, 5, 833-845.

Dinges, Ray. 1979. Development of Hyacinth Wastewater Treatment Systems in Texas. Presented at the Seminar on Aquaculture Systems for Wastewater Treatment, 11-12 September 1979, University of California, Davis.

Kruzic, A. P. 1979. Water Hyacinth Wastewater Treatment System at Walt Disney World. Presented at the Seminar on Aquaculture Systems for Wastewater Treatment, 11-12 September 1979, University of California, Davis.

Middlebrooks, E. J., A. J. Panagiotou, and H. K. Williford. 1965. Sludge Accumulation In Municipal Sewage Lagoons. Water and Sewage Works, 112, 2, 62.

Stewart, E. A., III. 1979. Utilization of Water Hyacinths for Control of Nutrients in Domestic Wastewater - Lakeland, Florida. Presented at the Seminar on Aquaculture Systems for Wastewater Treatment, 11-12 September 1979, University of California, Davis.

Swett, Dan. 1979. A Water Hyacinth Advanced Wastewater Treatment System. Presented at the Seminar on Aquaculture Systems for Wastewater Treatment, 11-12 September 1979, University of California, Davis.

Wolverton, B. C. 1979. Engineering Design Data for Small Vascular Aquatic Plant Wastewater Treatment Systems. Presented at the Seminar on Aquaculture Systems for Wastewater Treatment, 11-12 September 1979, University of California, Davis.

Wolverton, B. C., and R. C. McDonald. 1979. Upgrading Facultative Wastewater Lagoons with Vascular Aquatic Plants. Journal Water Pollution Control Federation, 51, 2, 305-313.

ENGINEERING ASSESSMENT

USE OF AQUATIC PLANT SYSTEMS

FOR WASTEWATER TREATMENT

Walter J. O'Brien
Black & Veatch Consulting Engineers
Dallas, Texas

INTRODUCTION

Aquaculture, the production of aquatic organisms under controlled conditions, has been practiced for many centuries to produce food, fiber, and fertilizer. This legacy is both a boon and a liability when the feasibility for using aquatic plants in municipal wastewater treatment is evaluated. In the first place, the terms "aquaculture" and "aquatic plants" are much too broad to permit meaningful analysis of wastewater treatment systems unless boundary conditions are established. The boundaries used in this assessment are:

(1) The aquatic plants used in the treatment processes are free floating macrophytes;

(2) The primary objective of the treatment systems is wastewater renovation. Byproduct recovery is a useful adjunct to this objective but it is of secondary importance, and;

(3) Aquatic plant treatment processes can be used to replace, or upgrade existing conventional treatment processes but they must successfully compete with these processes in terms of performance, reliability, and total costs.

Another restriction imposed upon this assessment is limitation of the plant species to water hyacinth, *Eichhornia Crassipes*, and duckweed, *Lemma* sp.,

Spirodela sp., and Wolffia sp. The basis for this restriction is simply that most of the information now available on the performance of aquatic plants in wastewater treatment processes is based upon these species.

Many individuals working with aquaculture systems will consider the constraints listed above unduly restrictive, but currently existing federal and state water pollution control legislation preclude adoption of a wider view. However, in many respects these restraints are beneficial in that they force a more critical evaluation on the use of aquaculture technology in wastewater treatment than has usually occurred in the past.

TREATMENT CONCEPTS

The evaluation of any biological treatment process requires: (1) definition of physical and chemical characteristics of the raw waste; (2) specification of treatment objectives, and; (3) an understanding of biological and physical responses of the plants or animals used in the treatment process. In actual practice, knowledge in one or more of these areas is often incomplete. However, use of this approach provides a powerful tool for defining and solving wastewater treatment problems.

The raw wastewater characteristics of primary importance are : (1) range of flow rates; (2) range of water temperatures; (3) BOD_5, TS, TSS, TVSS, and nutrient concentrations; (4) concentrations of pathogens, and; (5) concentrations of toxic, organic, and inorganic constituents. Standard analytical techniques are available for measuring these constituents in existing wastewater discharges. Characterization of effluents from projected sources of wastewater is more difficult but can usually be done with information obtained from literature sources.

Establishment of treatment objectives is done by regulatory officials acting under federal or state authority. In many cases, secondary or advanced secondary treatment will be sufficient. In other situations, advanced waste treatment processes which will achieve nutrient removal are required. In all cases, the concentrations of toxic substances must be reduced to acceptable levels by either pretreatment at the source or by the treatment process. Typical effluent characteristics achieved by different treatment levels are summarized in Table 1.

TABLE 1

ASSUMED EFFLUENT CONCENTRATIONS FOR SELECTED PARAMETERS AFTER SPECIFIED LEVELS OF WASTEWATER TREATMENT

(Values in mg/1)

Parameter	Secondary Treatment	Advanced Secondary Treatment	Advanced Waste Treatment
BOD	30	10	5
TSS	30	10	5
Total Nitrogen mg/1 as N	--	5	3
Total Phosphorous mg/1 as P	--	5	1

The magnitude for each of the parameters given in Table 1 for advanced wastewater treatment will vary for specific treatment facilities. However, the values given in Table 1 will be used as a basis for defining advanced wastewater treatment in this assessment.

PLANT CHARACTERISTICS

Understanding the biological response of water hyacinths or duckweed in relatively straight forward when compared to the population dynamics of activated sludge or

anaerobic digestion. Unfortunately, however, the literature now available contains wide variations for growth responses which are of interest in wastewater treatment systems. This situation is partly due to differences in the environments encountered in natural systems and in the enriched media provided by wastewater.

The water hyacinth is commonly found in waterways in tropical and semitropical areas around the world. It grows throughout Florida, in southern Georgia, Alabama, Mississippi, Louisiana, and in parts of Texas and California. It is usually free-floating, obtaining nutrients from the water. The individual plants measure from 50 to 120 cm from root tip to the top of the flower cluster when grown in wastewater. (1) This corresponds to a standing crop ranging from 100 to 410 metric tons/hectacre (wet weight). (1) Approximately 95 per cent of the weight of the plant tissue is water.

Productivity is also controlled by water temperature with plants growing most rapidly from 28° to 30°C. Growth ceases at water temperature above 40°C or below 10°C. (2) Air temperatures of -3°C for 12 hours will destroy the leaves and exposure at -5°C for 48 hours will kill the plants. (3) This restricts the area of uniform year around plant growth to southern Florida and southern Texas. Throughout the remainder of the present range of the plant, active growth occurs from 7 to 10 months per year. (4) The geographic distribution and length of the active growing season could be extended by the use of transparent covers placed over the plants. However, use of this technique to expand the geographic range may be influenced by the legal implications of Public Law 874, the Grass and Plants Interstate Shipment Act, Amendment to Chapter 3, Title 18, USC, which prohibits the interstate transport or sale of water hyacinths, alligator grass, water

chestnuts, and the seeds of these plants. (4) Similar state regulations also apply in some areas.

Plants which are not in the active growth phase will shield the underlaying water from sunlight but will not produce significant nutrient removal. Plants killed by low air temperatures will also act as a barrier to sunlight but should be harvested prior to significant breakdown of the plant tissue. Failure to remove these plants will produce a significant BOD_5 load in the treatment system.

The composition of water hyacints removed from a treatment system will provide an initial estimate of the nutrient removal potential of these plants. These characteristics are summarized in Table 2.

TABLE 2

DRY WEIGHT COMPOSITION OF
WHOLE WATER HYACINTH PLANTS GROWN IN WASTEWATER

Source Ref (5)

PARAMETER	% DRY WEIGHT AVERAGE	% DRY WEIGHT RANGE
Crude Protein	18.1	9.7 - 23.4
Fat	1.88	1.59 - 2.20
Fiber	18.6	17.1 - 19.5
Ash	16.6	11.1 - 20.4
Carbohydrate*	44.8	36.9 - 51.6
Kjeldahl Nitrogen (as N)	2.90	1.56 - 3.74
Phosphorous (as P)	0.63	0.31 - 0.89

*Computed by mass balance

Use of the values given in Table 2 will give a conservative estimate for nutrient removal by hyacinth systems. More complete material balances should

also include denitrification and nitrogen and phosphorous uptake and removal by other biota in the treatment system. Preliminary estimates for material balances across secondary pond systems in central Florida are available. (6) The composition of hyacinth leaves and stems has also been measured. (5)(7)(8) This information can be used to provide order of magnitude estimates applicable to treatment systems which harvest only the plant tops by mowing the standing crop. (9) However, if byproduct recovery is an integral component of the treatment facility, additional research will be required to more fully characterize parts of the plants obtained by mowing.

Hyacinths will also remove dissolved inorganic constituents and heavy metals from wastewater by sorption onto the root system and by incorporation into plant tissue. (4)(7)(8)(10)(11)(12) Phenols can also be removed. (13)

Growth rates for hyacinth systems are a function of water temperature, wastewater composition, and the procedures used for plant harvesting. (6)(14) Installations used for the removal of nutrients or toxic materials should be operated at the maximum practical growth rate.

Evapotranspiration from hyacinth covered ponds has been reported to be from 3.2 to 5.7 times greater than evaporation from open water under the same climatological conditions. (3)(15)(16) These values have been chanllenged by Idso who claims the evapotranspiration measurements conducted by previous investigators were distorted by the small sizes of the experimental facilities. (17) Resolution of this controversy is needed before water hyacinth systems are used in water short areas or in water recycle systems.

Duckweed (Lemma sp., Spirodela sp., and Wolffia sp.) has been investigated less extensively than hyacinth for use in wastewater treatment. However, it has a much wider geographic range because it vegetates at temperatures above 1° to $3^{o}C$ and winters well. The plants are relatively small flat disks which float and form mats on the water surface.

Harvesting is relatively simple because these plants can be removed from the water by continuous belt skimmers similar to those used for oil removal. However, the small size of duckweed also means the plants are readily displaced by wind and wave action. Wind screens and/or floating barriers are usually required to maintain a continuous mat of plants on the surface of a pond.

Duckweeds grown at $27^{o}C$, under laboratory conditions, were reported to double in frond number, and thus area, every 4 days. (18)

The dry weight of duckweed grown under these conditions was 252 kg/ha. Duckweed, like hyacinth, contains approximately 95 per cent water in the plant tissue when harvested. The composition of this tissue is summarized in Table 3.

Duckweeds also show a capability for removing metals from wastewater. However, essentially no quantitative data is available on the use of these plants for treatment of industrial wastewater.

The surface mat of plants produced by duckweeds will prevent exchange of oxygen between the atmosphere and the water in a pond. This produces anaerobic conditions in the treatment system but also prevents mosquito production. Mosquito control must be provided in water hyacinth systems by the use of fish (Gambusia, Poecilia, Astyanax).

TABLE 3

DRY WEIGHT COMPOSITION OF
DUCKWEED PLANTS GROWN IN WASTEWATER

Sources Ref (18)(19)(20)

PARAMETER	AVERAGE % DRY WEIGHT
Crude Protein	29.2
Fat	5.5
Fiber	11.8
Ash	17.7
Carbohydrate*	35.8
Kjeldahl Nitrogen (as N)	4.59
Phosphorous (as P)	0.80

*Computed by mass balance

TREATMENT PROCESSES

Aquatic macrophytes can be used in single cell ponds, in series pond systems, in ponds providing tertiary treatment following conventional secondary treatment, and in completely integrated facilities. The quality of the final effluent from these systems improves with complexity of the facility.

A single cell hyacinth covered lagoon located in southern Mississippi produced an effluent BOD_5 of about 7 mg/l and TSS of about 10 mg/l when loaded between 22 to 30 kg BOD_5/ha/day. (21) The surface area of this lagoon was approximately 2 ha. The average water depth was about 1.2 m and the hydraulic retention time was approximately 54 days.

A second hyacinth covered lagoon, also located in southern Mississippi, produced an effluent BOD_5 of about 23 mg/l and TSS of about 6 mg/l when loaded at 44 kg BOD_5/ha/day. This lagoon had a surface area of 3.6 ha and an average depth of 1.73 m. However, this system was almost entirely anaerobic and produced odors at night when photosynthesis was not occurring. (22) These installations indicate single cell hyacinth covered lagoons can meet advanced secondary treatment standards when the lagoon is very lightly loaded.

Pilot scale hyacinth ponds treating effluent from conventional primary sedimentation basins produced an effluent BOD_5 of approximately 28 mg/l and TSS of about 23 mg/l during the first month of operation. (23) The loading was 104 kg BOD_5/ha/day and the water depth was 0.38 m. A portion of the plants were harvested twice per week. Long term data will be needed to evaluate the feasibility of this process.

Multicell lagoons followed by hyacinth covered cells have been evaluated in Mississippi and Texas. (9)(24)(25)(25)(27) The complexity of these treatment systems has varied through a relatively wide magnitude. Lightly loaded facilities have produced efflents which meet advanced secondary treatment standards. More heavily loaded facilities and/or plants designed for use with minimum supervision and maintenance have met secondary treatment standards. Hyacinth cells appear to be a very cost effective method for upgrading oxidation pond effluents when these facilities are located in warm climates. (28) Design criteria for this type of system have been proposed. (9)(29)

The use of hyacinth cells to provide advanced waste treatment to the effluent from conventional secondary treatment plants has been pursued in Florida. (6)(30)

Preliminary operating results from two facilities indicate the final effluent will meet advanced waste treatment standards for BOD_5, TSS, and TN but will not meet phosphorous standards. This is to be expected because the N:P ratio of secondary effluent is slightly greater than the N:P ratio found in the harvested plants. Supplemental nitrogen addition to the hyacinth pond may be a viable method for correcting this problem. (6)(30) However, even if this approach is successful, the capability of consistantly achieving advanced waste treatment standards will require relatively intensive management practices. These will include frequent harvesting of the plants and will probably include supplemental feeding of iron salts to prevent chlorosis. Despite these potential problems, hyacinth systems alone or in combination with other processes offer considerable promise for economically achieving advanced waste treatment standards.

Integrated systems combining anaerobic, facultative, and aerobic processes into a treatment sequence have been developed by the firm Solar AquaSystems. (31) Their treatment facilities consist of a series of reactors covered with greenhouse type roofs to more fully utilize solar energy and to prevent the loss of water by evapotranspiration. Water hyacinth or duckweed is used to shade the water surface in the final cell. A demonstration plant is now under construction in the City of Hercules, California. (32)

The only field scale industrial wastewater treatment facility using hyacinths is located at the National Space Technology Laboratories, Bay St. Louis, Mississippi. (12) This system receives discharges from photographic and chemical laboratories and produces an effluent which meets discharge standards. Plants removed from this facility must be disposed of in a sealed pit designed to prevent ground water pollution.

Pilot scale tests are also being conducted with water hyacinth systems to treat effluent from existing lagoons at the Exxon Refinery and Petrochemical Complex in Baytown, Texas. (33) Substantial reductions in TSS have been achieved. Biological concentration of zinc, chromium, cadimum, and lead has also been observed to occur primarily in the bottom section of these plants.

Ultimate disposal of plants harvested from facilities treating domestic sewage can be done by composting, by producing animal feed, or by generating biogas during anaerobic digestion. All of these processes are technically feasible. (6)(9)(29)(30)(34) In most field installations they will not be sufficiently profitable at this time to offset the cost of solids disposal.

The only field scale installation now using duckweed is a two cell lagoon system located in North Biloxi, Mississippi. (20) The first cell is aerated. The second cell is covered with a layer of duckweed. This cell is anaerobic but the cover produced by the duckweed has produced an odor free system. Effluent from this facility is much better than secondary standards.

No large scale solids disposal facilities exist from duckweed at the present time.

COSTS

The economic incentive for including hyacinth ponds in a wastewater treatment facility is very attractive under favorable climatic conditions. Comparative cost estimates for 3785 m^3/d (1 mgd) plants designed to achieve advanced secondary and advanced waste treatment are summarized in Tables 4 and 5. (35)

TABLE 4

COMPARISON OF TOTAL COSTS,
ALTERNATIVE METHODS FOR ACHIEVING
ADVANCED SECONDARY TREATMENT
(Plant Capacity 3785 m^3/day)

Source Ref (28)

TREATMENT SYSTEM	TOTAL COST ¢/3.785 m^3*	
	FAVORABLE CONDITIONS	LESS FAVORABLE CONDITIONS
Oxidation pond plus hyacinths	45	74
Overland flow land treatment	96	115
Conventional advanced secondary treatment	130	130

*Cost includes amortized capital, operation, maintenance, and land

The hyacinth system considered in Table 4 consists of preliminary screening and grit removal followed by conventional oxidation ponds and hyacinth ponds operated in series. The harvested hyacinths are composted and sold or given away. The conventional advanced secondary treatment system consists of activated sludge followed by dual media filtration.

TABLE 5

COMPARISON OF TOTAL COSTS
ALTERNATIVE METHODS FOR ACHIEVING
ADVANCED WASTEWATER TREATMENT
(Plant Capacity 3785 m^3/day)

Source Ref (28)

TREATMENT SYSTEM	TOTAL COST ¢/3.785 m^3*
Overland flow plus hyacinths	79
Slow rate land treatment	110
Conventional advanced waste treatment	240

*Cost includes amortized capital, operation, maintenance, and land

The hyacinth system considered in Table 5 consists of preliminary screening and grit removal, chemical addition of alum or ferric chloride, an overland flow facility, and water hyacinth ponds. Harvested hyacinths are composted. The conventional advanced waste treatment system consists of activated sludge, chemical precipitation of phosphorous, biological nitrification followed by denitrification, and mixed media filtration.

The costs given in Tables 4 and 5 are based upon standardized estimation techniques keyed to March 1978 national indices and are not site specific. (35) However, the relatively broad range shown in these estimates clearly indicates aquaculture systems are worthy of serious consideration in relatively small treatment facilities. Less extensive analyses indicate the cost advantages of aquaculture systems continues to be favorable for treatment facilities with hydraulic capacities up to at least 37,850 m^3/d (10 mgd). (28)

SUMMARY

Wastewater treatment by aquatic macrophytes is currently considered by the USEPA to be included within the scope of the innovative and alternative technology provisions of Public Law 95-217. (35) Information reviewed for this assessment indicates this classification is correct. Hyacinth systems are now ready for routine use to upgrade conventional lagoons to meet secondary treatment standards in subtropical climates. Additional development is necessary to further define conditions under which they can be effective as advanced secondary and advanced waste treatment processes. The mechanism provided by the innovative and alternative technology program can be used to accelerate these investigations. These comments are expanded below.

Hyacinth ponds offer a viable method for upgrading the effluent from waste stabilization lagoons (both facultative and anaerobic) in warm climates. Hyacinth facilities are much less attractive in colder regions because of the increased complexity required in the treatment system. Legal ramifications, if plants escape from the treatment facility, are also unresolved at the present time.

Hyacinth ponds will provide some nutrient removal under all conditions. In central and southern Florida they have very good potential for achieving advanced waste treatment standards on a year around basis. Additional information is needed to establish an optimum harvesting strategy for the plants and to develop alternative methods for achieving the phosphorous effluent standards.

Present use of hyacinths for treatment of industrial wastes is very limited. Hyacinths appear to have good potential for this application if satisfactory solids disposal facilities are included as part of the process design.

Integrated lagoon systems will have application in areas where there is a market for reclaimed water and the solid residues produced by the aquatic macrophytes.

The comparatively low level of interest in the use of duckweed treatment system is surprising. This plant has a relatively wide geographic distribution and is comparatively easy to harvest.

RECOMMENDATIONS

1. The concept of using water hyacinth ponds to upgrade the effluent from waste stabilization lagoons to secondary standards has been sufficiently developed

to make it a viable wastewater treatment technique in warm climates. Federal and state regulatory agencies should encourage use of this process in appropriate localities.

2. The use of water hyacinth ponds to upgrade secondary effluent to advanced waste treatment standards is a viable concept in central and southern Florida. Additional research is needed to establish optimum plant harvesting techniques and to evaluate alternative methods for removing additional phosphorous from the wastewater. This research should be encouraged by regulatory agencies because hyacinth systems have the potential for providing advanced waste treatment at a relatively economical cost.

3. Industry should be made aware of the potential treatment possibilities offered by plant macrophytes. The low costs associated with these systems should lead to rapid adoption.

4. Additional research emphasis should be directed toward the use of duckweed, and other cold weather plants, in wastewater treatment systems.

5. Future aquaculture research projects should be designed to provide mass balances of water and the pollutants of interest across each pond in the system. Twenty-four hour composite sampling should be used so these mass balances will reflect the actual flux of materials through each pond.

REFERENCES

1. Wolverton, B. C. and McDonald, R. C., "Water Hyacinth Productivity and Harvesting Studies", NASA/ERL Report No. 171, NSTL Station, MS39529 (1978).

2. Bagnall, L. O., et.al., "Feed and Fiber from Effluent Grown Water Hyacinth", Wastewater Use in the Production of Food and Fiber, Proceedings, EPA 660/2-74-041 (1974).

3. Penfound, W. T. and Earle, T. T., "The Biology of the Water Hyacinth", Ecological Monographs, 18, 447 (1948).

4. Robinson, A. C., et.al., "An Analysis of the Market Potential of Water Hyacinth Based Systems for Municipal Wastewater Treatment", Report BCL-OA-TFR-76-5 Battelle, Columbus Laboratories (1976).

5. Wolverton, B. C. and McDonald, R. C., "Nutritional Composition of Water Hyacinths Grown on Domestic Sewage", NASA/ERL Report No. 173, NSTL Station, MS39529 (1978).

6. Stewart, E. A., III, "Utilization of Water Hyacinths for Control of Nutrients in Domestic Wastewater - Lakeland, Florida". Seminar on Aquaculture Systems for Wastewater Treatment, University of California, Davis (1979).

7. Dinges, R., Water Hyacinth Culture for Wastewater Treatment, Texas Department of Health, Division of Wastewater Technology and Surveillance, Austin, Texas (1976).

8. Dinges, R., "Upgrading Stabilization Pond Effluent by Water Hyacinth Culture", Journal of Water Pollution Control Federation, 50, 833 (1978).

9. Dinges, R., "Development of Hyacinth Wastewater Treatment Systems in Texas", Seminar on Aquaculture Systems for Wastewater Treatment, University of California, Davis (1979).

10. Wolverton, B. C. and McDonald, R. C., "Bioaccumulation and Detection of Trace Levels of Cadmium in Aquatic Systems by Eichhornia Crassipes", Environmental Health Perspectives, 27, 161 (1978).

11. Wolverton, B. C. and McDonald, R. C., "Water Hyacinth Sorption Rates of Lead, Mercury, and Cadmium", NASA/ERL Report No. 170, NSTL Station, MS39529 (1978).

12. Wolverton, B. C. and McDonald, R. C., "Wastewater Treatment Utilizing Water Hyacinths (Eichhornia Crassipes) (Mart.) Solms", National Conference on Treatment and Disposal of Industrial Wastewater and Residues, Houston, Texas (1977): also in "Compiled Data on the Vascular Aquatic Plant Program: 1975-1977", NASA, NSTL Station, MS, NTIS N78-26715.

13. Wolverton, B. C. and McKnown, M. M., "Water Hyacinths for Removal of Phenols from Polluted Waters", Aquatic Botany, 2, 191 (1976); also in "Compiled Data on the Vascular Aquatic Plant Program: 1975-1977", NASA, NSTL Station, MS, NTIS N78-26715.

14. Wolverton, B. C. and McDonald, R. C., "Water Hyacinth (Eichhornia crassipes) Productivity and Harvesting Studies", NASA/ERL Report No. 171, NSTL Station, MS39529 (1978).

15. Timmer, C. E. and Weldon, L. W., "Evapotranspiration and Pollution of Water by Water Hyacinth", Hyacinth Control Journal, 6, 34 (1967).

16. Rogers, H. H. and Davis, D. E., "Nutrient Removal by Water Hyacinth", Weed Science, 20, 423 (1972).

17. Idso, S. B., "Discussion: Evapotranspiration From Water Hyacinth (Eichhornia crassipes (Mart.) Solms) in Texas Reservoirs", Water Resources Bulletin, 15, 1466, (1979).

18. Harvey, R. M. and Fox, J. L., "Nutrient Removal Using Lemma minor", Journal of Water Pollution Control Federation, 45, 1928 (1973).

19. Culley, Jr., D. D. and Epps, E. A., "Use of Duckweed for Waste Treatment and Animal Feed", Journal of Water Pollution Control Federation, 45, 337 (1973).

20. Sutton, D. L. and Ornes, W. H., "Phosphorous Removal From Static Sewage Effluent Using Duckweed", Journal of Environmental Quality, 4, 367 (1975).

21. Wolverton, B. C., and McDonald, R. C., "Upgrading Facultative Wastewater Lagoons with Vascular Aquatic Plants", Journal of Water Pollution Control Federation, 51, 305 (1979).

22. McDonald, R. C., "A Comparative Study of a Domestic Wastewater Lagoon With and Without Water Hyacinths", NASA Tech Memorandum TM-X-72535 (1979).

23. Kruzic, A. P., "Water Hyacinth Wastewater Treatment System at Walt Disney World", Seminar on Aquaculture Systems for Wastewater Treatment, University of California, Davis (1979).

24. Wolverton, B. C. and McDonald, R. C., "Water Hyacinths for Upgrading Sewage Lagoons to Meet Advanced Wastewater Treatment Standards: Part II", NASA Tech Memorandum TM-X-72730 (1976); also available from NTIS N78-16481.

25. Dinges, R., "Upgrading Stabilization Pond Effluent by Water Hyacinth Culture", Journal of Water Pollution Control Federation, 50, 833 (1978).

26. Neuse, D. W., "Removal of Algae From an Oxidation Pond Effluent Through the Use of a Tertiary Water Hyacinth Pond System", M.S. Thesis, University of Texas at Austin (1976).

27. Dinges, R., "Texas Experimental Hyacinth Wastewater Treatment Systems: A Synopsis", Annual Meeting, Aquatic Plant Management Society, Chattanooga, Tennessee (1979).

28. Crites, R. W., "Economics of Aquatic Treatment Systems", Seminar on Aquaculture Systems for Wastewater Treatment, University of California, Davis (1979).

29. Wolverton, B. C., "Engineering Design Data for Small Vascular Aquatic Plant Wastewater Treatment Systems", Seminar on Aquaculture Systems for Wastewater Treatment, University of California, Davis (1979).

30. Swett, D., "A Water Hyacinth Advanced Wastewater Treatment System", Seminar on Aquaculture Systems for Wastewater Treatment, University of California, Davis (1979).

31. Serfling, S. A. and Alsten, C., "An Integrated Controlled Environmental Aquaculture Lagoon Process for Secondary or Advanced Wastewater Treatment", Performance and Upgrading of Waste Stabilization Ponds, (Middlebrooks, et.al. ed.) USEPA, Cincinnati, Ohio (1978).

32. Serfling, S. A. and Mendola, D. M., "The Solar Aquacell AWT Lagoon System for the City of Hercules, California", Conference on Wastewater Reuse, American Water Works Association, Washington, D.C. (1979).

33. Chambers, G. V., "Performance of Biological Alternatives for Reducing Algae (TSS) in Oxidation Ponds Treatment Refinery/Chemical Plant Wastewater", presented at the Fifty-First Annual Conference, Water Pollution Control Federation (1978).

34. Wolverton, B. C. and McDonald, R. C. and Gordon, J., "Bio-Conversion of Water Hyacinths into Methane Gas", NASA Tech Memorandum X-72725 (1975); also available from NTIS N78-26715.

35. Crites, R. W., Dean, M. J., and Selznick, H. L., "Land Treatment versus AWT - How Do Costs Compare?", Water and Wastes Engineering, 16, No. 8, 16 (1979).

36. U. S. Environmental Protection Agency, Innovative and Alternative Technology Assessment Manual (Draft), EPA 430/9-78-009 (1978).

COMBINED AQUACULTURE SYSTEMS FOR MUNICIPAL WASTEWATER TREATMENT - AN ENGINEERING ASSESSMENT

H. G. Schwartz, Jr. and B. S. Shin

INTRODUCTION

Concern over the cost of meeting increasingly stringent effluent quality requirements has prompted an intensified search for alternative technology for wastewater treatment. Wastewater aquaculture is one of the technologies that has received considerable attention in recent years. Traditionally, aquaculture means the science or art of producing useful biomass from controlled aquatic media. Useful biomass may also be produced in wastewater aquaculture systems, but the basic purpose is the treatment of the wastewater. A combined aquaculture system, or polyculture system, is defined for this paper as one in which major wastewater treatment work is carried out by several different levels of aquatic organisms. It includes wastewater treatment ponds with a combination of components such as mechanical elements, aquatic plants, invertebrates, and fish. The purpose of this paper is to assess the current status of combined aquaculture systems developed for municipal wastewater treatment and determine if these concepts are ready for routine use and, if not, what must be done to make them a reality.

PERFORMANCE OF COMBINED AQUACULTURE SYSTEMS

Although most wastewater aquaculture systems contain a diversified community of organisms and hence could be considered to be combined

aquaculture systems, this term has normally been applied only to those in which the use of different trophic levels is originally planned. Systems utilizing floating plants such as water hyacinths (Dinges, 1979; Stewart, 1979; Wolverton and McDonald, 1979 A,B), are not covered in this paper. In typical polyculture systems, nutrients in wastewater are first converted to single-cell organisms that serve as food for organisms of higher tropic levels in subsequent units.

Dinges (1976) studied, on a pilot scale basis, a five-step biological treatment system that consisted of a filter and a four-cell culture unit. The system was designed to treat the effluent from a stabilization lagoon. The filter was intended to reduce the biological solids content of the wastewater, caused by the growth of algae in the stabilization pond. The culture unit, 280 ft long x 30 ft wide x 2 ft deep, was divided into four segments. The first cell, approximately one-half of the culture unit, contained water hyacinths, duckweeds, snails, scuds, and insects. The second cell was devoted to culture zooplankton and was covered with duckweed to restrict algae growth. About 30% of this pond was 8 ft in depth to provide effective aeration using an airlift pump. Shrimp and fish were grown in the third and final cells, respectively. The theoretical detention time for the system was 5.3 days. Results obtained during a five-month period (from June to November), as presented in Table 1, show a substantial reduction in BOD, suspended solids, total and ammonia nitrogen, and fecal coliform. Calculated loading rates per unit surface area are also shown in Table 1 for BOD, COD, and suspended solids.

Full-scale polyculture systems utilizing various species of fish have been studied by Coleman, et al. (1974) at the Quail Creek

TABLE 1

PERFORMANCE OF A 5-STEP POLYCULTURE SYSTEM

(Dinges, 1976)

Wastewater Constituent	Influent mg/l	Effluent mg/l	Percent reduction of influent concentration	Loading* lb/day/acre
BOD_3	15	3.5	77	20.3
BOD_{20}	90	18	76	122.0
COD	70	40	43	94.9
Suspended solids	35	7	80	47.4
Total organic nitrogen	4.8	1.2	75	--
Ammonia	2.1	0.1	95	--
Fecal coliform/100 ml	1400	10	99	--

* Calculated based on 31,336 gpd flow.

Plant in Oklahoma City and by Henderson (1979) at the Benton Service Center in Arkansas. Both studies utilized six-cell, serially operated lagoon systems to treat raw wastewater, the first two cells for wastewater stabilization and plankton culture and the remaining four for the culture of fish. Coleman, et al. used mechanical aeration for the initial stabilization step and channel catfish as the major culture. Henderson accomplished initial waste stabilization without mechanical aeration and used silver and bighead carp as the major culture.

Table 2 summarizes the results for the last four cells of the two culture systems. All parameters such as unit area, detention time, loading, fish stocking, and fish yield are based on the fish culture unit only. The influents to the two culture units had similar characteristics with respect to BOD and suspended solids. With the exception of initial fish stocked and net fish production, all operating conditions and performance of the two fish culture units were very similar. Although the difference in testing period (see Table 2) might have affected net fish production and effluent quality, the results indicate that the quantity of fish initially stocked might have little effect on the system performance. In addition, the results further indicate that net fish production was not directly related to the amount of BOD or suspended solids removed from the system, but to the quantity of fish initially stocked. Both systems performed satisfactorily in removing organics and suspended solids.

As compared to conventional lagoon systems, both of the aforementioned culture units appear to have larger unit areas and lower organic loadings, although effluent BOD_5 and suspended solids concentrations of 30 mg/l could be met with only one fish pond in the Henderson's case

TABLE 2. PERFORMANCE OF POLYCULTURE SYSTEMS UTILIZING FISH

Source	Coleman, et al. (1974)	Henderson (1979)
Location	Oklahoma	Arkansas
Period	June - Oct., 1973	Dec., 1978 - July, 1979
Major Culture	Channel catfish	Silver and bighead carp
Minor Culture	Tilapia	Channel catfish
	Minnows	Buffalofish
		Grass carp
Flow (MGD)	1.0	0.45
Unit Area (acres/MGD)	26	36
Average Depth (ft)	3.9 - 4.3	4.0
Detention time (days)	35	47
Loading (lb BOD_5/acre/day)	7.8	6.5
(lb TSS/acre/day)	23	8.7
Initial fish stocked (lb/acre)	27	378
Net fish production (lb/acre/mo)	34	340
(lb/lb BOD_5 removed)	0.2	2.9
(lb/lb TSS removed)	0.06	2.4
Performance: Influent - Effluent (% Removal)		
BOD_5 (mg/l)	24 - 6 (75)	28.1 - 9.4 (67)
TSS (mg/l)	71 - 12 (83)	38.0 - 17.1 (55)
Total N (mg/l)	7.04 - 2.74 (61)	--
NH_3-N (mg/l)	0.4 - 0.12 (70)	5.1 - 2.0 (60)
NO_2-N (mg/l)	0.96 - 0.16	0.02 - 0.11
NO_3-N (mg/l)	2.31 - 0.29	0.01 - 0.5
Total P (mg/l)	7.97 - 2.11 (74)	3.0 - 2.5 (17)
Fecal coliform (No/100 ml)	1380 - 20	--
pH	8.2 - 8.3	7.88 - 8.19
DO (mg/l)	--	3.0 - 7.4

and three fish ponds in the case of Coleman, et al. The behavior of nitrogen species in the fish culture units of the two systems was quite different, apparently reflecting the characteristics of the influent. One received wastewater which was well nitrified while the other received wastewater containing predominantly ammonia and possibly organic nitrogen. No similarity is shown in the phosphorus removal efficiency. There were no reported incidents of fish kills, indicating that the ammonia, nitrite, dissolved oxygen, and pH levels shown in Table 2 were within tolerable ranges.

A lagoon wastewater treatment system used to culture muskellunge has been described by Hinde Engineering Company (undated). The system, located in Dorchester, Wisconsin, consisted of two aerated lagoons each at 1.36 acres x 10 ft deep followed by another aerated fish culture lagoon with 0.5 acres x 10 ft deep. At a flow rate of 63,600 gpd, the hydraulic detention times were 51.2 days for each of the first two cells and 25.9 days for the fish culture unit. The culture unit was stocked with 5,000 muskellunge infants of about 2.5 in. long. Two-year data, shown below, indicated that both effluent BOD_5 and suspended solids

	Influent		Effluent	
	Range	Average	Range	Average
BOD_5 (mg/l)	125.0 - 400.0	232.3	2.8 - 16.2	5.9
SS (mg/l)	69.0 - 285.7	183.0	2.8 - 15.2	6.5
DO (mg/l)	--	--	8.0 - 12.0	--

averaged about 6 mg/l and, on a monthly average basis, did not exceed

about 16 mg/l during the entire test period. Data for the fish culture unit alone are not available and the extent to which fish contributed to effluent quality improvement is not known. Experience with other aerated lagoon systems of this type, however, suggests that the fish culture pond may well have served as a polishing unit reducing suspended solids and BOD values in the final effluent.

A two-stage culture unit designed to upgrade secondary effluent was explored by the Las Virgenes Municipal Water District (1973). The system consisted of a shallow algae culture pond followed by a zooplankton (Daphnia pulex) culture pond, and was operated with a detention time of about 10 days for each stage. System COD reduction was above 40%. Nitrogen and phosphorus removal efficiency was hampered by occasional invasion of Daphnia or rotifers in the first stage pond, which decimated the algal population. Lack of success in controlling such events was the principal obstacle to further development of the system. Dinges (1976) also investigated a similar system and reported that production of Daphnia was severely hampered by high pH caused by algal growth.

Ryther (1979) and Goldman and Ryther (1976) investigated a pilot scale, continuous flow marine polyculture system at the Environmental Systems Laboratory of the Woods Hole Oceanographic Institution. The system was designed to remove nitrogen from secondary effluents and at the same time to culture marine organisms that have commercial values. The system consisted of shallow ponds (3 ft deep) to culture single-cell marine algae, aerated raceways containing stacked trays of shellfish, and, finally, a culture unit for seaweed production. The raceways were stacked with different species of oysters and clams, and contained small numbers of other shellfish together with lobsters and blackback flounders. The secondary effluent was diluted with seawater at various proportions.

Results for the phytoplankton production cell show that the mean nitrogen removal rate was 2.7 lbs/acre/day during the winter and 7.1 lbs/acre/day during the summer. Based on these results, Ryther projected the area requirement for the algae pond at 77 acres/MGD in the winter and 26 acres/MGD in the summer for secondary effluent with a nitrogen content of 24 mg/l. Problems encountered in this process step were inhibition of algal production by particulate organic matter in the secondary effluent, seasonal variations of algal species, and their protozoan predation. Since some algal species were detrimental to shellfish culture, Ryther (1979) felt that algal species control was a critical, unresolved problem.

Shellfish culture experiments with the American oyster and hard clam indicated that these organisms have slow growth rates and high mortality. Lack of success with these organisms was attributed to the predominant growth of the marine algae, P. tricarnutem, in the algal culture pond that were inferior and unsuitable as food for the shellfish. Recent experiments (Ryther, 1979) have shown, however, that several exotic shellfish species are capable of utilizing the kinds of algae that could be mass produced. They include the Manila clams (T. japonica), European oysters (O. edulis), and Japanese oysters (G. gigas).

Seaweeds were used in the last stage of the polyculture system to remove nutrients not initially assimilated by the phytoplankton and those originating from the excretions of the shellfish and other animals used. The content of the culture unit was vigorously circulated to keep the seaweed in suspension. With the seaweed, Gracilaria tikvahiae, the yield was 3 g dry organic matter/m^2/day in the winter and 10 g/m^2/day in the summer.

The mass balance for inorganic nitrogen for the entire system was determined during a steady-state operation period. The nitrogen removal efficiency was 89.3% when the nitrogen input from the seawater was considered and 93.6% otherwise.

Stewart and Serfling (1979) reported on a proprietary lagoon technology called Solar AquaCell system which consisted of a series of two anaerobic cells, a facultative cell, and finally two aerobic cells. The system is enclosed in greenhouse-type pond cover and utilizes fixed-film "BioWebs" in cells 2 through 5 and floating aquatic macrophytes in the aerobic cells. The anaerobic stage was basically similar in design to large-scale septic tanks and had the function of removing suspended solids and sludge storage/digestion. Oxygen in the facultative and aerobic cells was supplied by coarse bubble diffused aeration.

The Solar AquaCell system was initially tested on a pilot scale basis at the Solan Beach treatment plant in the San Diego area using wastewater fed intermittently at an overall system detention time of about four days (Serfling and Alsten, 1978). Another pilot scale test was conducted recently at the San Elijo treatment plant in Cardiff, California (Stewart, et al., 1979). The system was operated at a 4.5-day detention time: 0.5 days for the anaerobic stage and about 1.3 days for each of the three facultative and aerobic cells. Dissolved oxygen was maintained at 1-3 mg/l and 3-6 mg/l in the facultative and aerobic cells, respectively. The results show that reduction of BOD_5 and suspended solids to less than 30 mg/l could be achieved by the anaerobic and facultative stages and that further improvement in the effluent quality was possible with the addition of the aerobic stage. The authors also reported a substantial reduction of total Kjeldahl

nitrogen, and attributed such reduction to nitrification occurring in the facultative and aerobic cells. Phosphate removal was reported to be low. Additional data for the aerobic and facultative stages were reported by Stewart and Serfling (1979).

With the use of water hyacinths in the aerobic stage, the Solar AquaCell was reported to achieve effluent BOD_5 and suspended solids levels of less than 5 mg/l at a system detention time of 5 days. However, the removal of nitrogen attributable to the aquatic plants was relatively minor, accounting for about 10 percent of the total nitrogen removed from the aerobic stage. The remaining 90 percent was removed by the "BioWeb" and bottom deposits (Stewart and Serfling, 1979).

ENGINEERING ASSESSMENT OF POLYCULTURE SYSTEMS

In the preceding section, a brief review was made on the performance of polyculture systems that have been explored in recent years for the treatment of municipal wastewater. Results indicate that systems involving higher forms of animals are generally less efficient, require more land area, or are more difficult to control than their aquatic plant counterparts. It has been projected that plants will play a more dominant role in future aquaculture systems because they grow quicker, accumulate more contaminants, are generally more tolerant to temperature variations, and are more adaptive to a harsh environment that might prevail in wastewater (Stowell, et al., 1979). Another important advantage that plants have over animals is that they afford more avenues for potential utilization.

In order to design and operate an aquaculture system on a rational basis, understanding and knowledge of its physical characteristics, engineering criteria, treatment capability as a function of system constraints, by-product disposal/utilization, and costs are required. This section will address these topics with particular emphasis on the availability of design and operational data.

Physical Characteristics

The combined aquaculture system as defined herein includes lagoons with a combination of such active components as fixed film media for bacterial growth, aquatic plants, invertebrates, and fish. The use of fixed films has shown under controlled conditions of pilot scale testing to be an effective means of reducing the required size of conventional aerated lagoons. The optimum surface area required per unit volume of lagoon should depend on the characteristic of wastewater to be treated, hydraulic detention time, and the system's capability for delivering the increased oxygen demand. Data presented by Stewart and Serfling (1979) indicate that, for primary effluent, aerated lagoons with 2-3 ft^2 fixed films/gpd of wastewater could achieve secondary level treatment at a detention time of about 1.3 days. Recommended detention time and fixed film density for advanced secondary treatment are about 4.0 days and 6-9 ft^2/gpd, respectively. These values for fixed film requirements are equivalent to 10.6-15.9 ft^2/ft^3 of lagoon volume. The use of fixed films in aerated lagoons appears to be an attractive concept and full-scale data on the merits of fixed films should be available from the Solar AquaCell system for the City of Hercules, California, which was scheduled for startup in January, 1980 (Stewart and Serfling, 1979).

The types of fish that have been commonly used in wastewater aquaculture experiments are catfish, carp, tilapia, and minnows. Of these, carp are recognized to have great potential for wastewater applications because of their hardiness and adaptability to a wide variety of food. On the other hand, the use of tilapia may be restricted in cold climatic areas due to their limited tolerance to low temperatures. Dissolved oxygen is the most critical environmental factor which affects the functioning of fish culture units. Dissolved oxygen concentrations of less than about 1 mg/l are acutely toxic to the fish noted above, and many of their physiological activities can be adversely affected at higher concentrations. To date, fish-based wastewater aquaculture systems have been applied to secondary effluent or its equivalent. Under such conditions and with the use of shallow ponds, mechanical aeration was not required. Most of the fish culture systems using wastewater as the feed, as described in the preceding section and elsewhere, have been largely oriented toward examining the suitability of conventional lagoon effluent for biomass production. The practice of fish stocking varied widely. Information on fish stocking requirements relative to wastewater characteristics and treatment objective is not available at the present time.

Aquatic macrophytes that have been used in the combined aquaculture system include water hyacinth and duckweed. The climatic condition is the major constraint for the use of water hyacinth. The water hyacinth is a tropical plant and its active growth is restricted to water temperatures of 10 to 35°C with an optimum range from 25 to 27.5°C (Dinges, 1979). Duckweed can survive throughout the winter in milder temperate climates and may be useful as a supplement for water hyacinth during the

winter months. Dinges (1979) noted that the most critical design factors for water hyacinth culture basins are the rate of flow of wastewater through the basin and uniform distribution of wastewater at inlet and outlet zones. He observed solids breakthrough in a pilot scale unit when the horizontal velocity was 2.5 - 2.9 ft/hr. No solids breakthrough occurred at 1.6 - 1.9 ft/hr. Based on these observations, he concluded that a broad rectangular shape would be the preferred configuration for water hyacinth culture basins. Disadvantages of this shape, however, would be high costs associated with maintaining uniform flow across the basin.

By their very nature, combined aquaculture systems require multiple cells, and the optimum number of cells to be used should depend on individual circumstances. Specific reasons for the need for multiple cells would be, among others, to regulate food chain relationships, maintain proper culture population, and control the level of dissolved oxygen. In addition, combined aquaculture systems should be designed to allow maximum operational flexibility and uninterrupted services when any cell must be taken out of operation for cleaning and other maintenance purposes.

Most aquaculture systems have been explored using existing lagoons and, hence, specifics on optimum number, size, and configuration of culture cells have not been established. Hydraulic characteristics of fish culture basins may be of less consequence than those of hyacinth culture basins.

Engineering Criteria

Wastewaters from small municipalities have been commonly treated in stabilization lagoons of various types. Although inexpensive to construct and operate, lagoon systems frequently suffer poor effluent quality during warm summer months due to excess growth of algae. Most conventional lagoon systems can be converted with little or no modification to aquaculture systems of the types described here, to upgrade the effluent quality to the level of secondary or advanced secondary treatment.

Major problem areas associated with animal-based aquaculture systems have been the system instability, predation of low level organisms, and fish mortality caused by low temperatures, while major problem areas associated with hyacinth-based aquaculture systems include freezing of the culture during winter months, breeding of mosquitoes and other vectors, low efficiency during cold seasons, and occasional odor development. Mosquitoes have been successfully controlled by the establishment of large fish population in the culture unit (Stewart, 1979).

Aquaculture systems function under numerous variables, many of which are beyond the control of the operator. It has been a general consensus that the lack of system reliability caused by these uncontrollable variables is the major shortcoming of aquaculture systems. Auxiliary processes that could be used during system upset or for seasonal operation have not been explored.

The maximum flow for which an aquaculture system can be economically built and operated is largely speculative at this time. To arrive at such a flow, considerations should be given to the availability of land, harvesting capabilities of existing equipment, practicability of

resource recovery and, if insulation is required, the feasibility of building large greenhouse-type cover that can withstand snow and other loads. For hyacinth-based systems, harvesting may be the limiting factor for unit size based on the capacity of present equipment. Bagnall (1979) suggested a maximum harvesting capacity of 10 tons/hr (wet weight) with present equipment. Assuming a 6 hour per day operating time and a 2.5 ton/day/acre (wet weight) hyacinth production rate, the maximum area that could be served by the equipment would be 24 acres/day. Further, assuming an area requirement of 8 acres per 1 MGD of flow, the design capacity of the system would be 3 MGD. Multiple trains of 3 MGD capacity, each with its own harvester, would be technically possible, but the labor costs for operators might be high.

A number of investigations have been made in recent years to determine the cost-effectiveness of aquaculture systems. The major difficulty encountered in such analyses was the lack of information on system sizing, operation and maintenance requirements, and product harvesting, processing, and utilization/disposal. Most analyses have been based on data obtained from pilot scale experiments. Comprehensive and reliable economic evaluations will not be possible until full-scale data are available. Duffer and Moyer (1978) provided a review of economic data for aquaculture systems. Additional cost data are presented by Crites (1979). He concluded that for advanced secondary treatment at a 1-MGD level, conventional stabilization pond followed by water hyacinths is significantly more cost-effective than conventional treatment consisting of activated sludge plus dual media filtration. The analysis indicated that the cost of water hyacinth harvesting and composting had a negligible effect on overall costs.

Pollutant Removals

The operating conditions and performance of combined aquaculture systems based on fish, fixed films, and others were described in the preceding section. Relevant information such as unit loadings, fish stocking, and density of active components based on lagoon surface area or volume has also been covered. Although comprehensive studies involving side-by-side comparison between fish-based aquaculture systems and equivalent conventional lagoon systems are not available, the former has been shown to perform better in removing simple organics and suspended solids. Carpenter, et al. (1976) showed that a six-cell lagoon system with fish stocked in the last four cells produced effluent with 6 mg/l BOD_5 and 12 mg/l suspended solids, while the effluent from the same system, but without fish contained 13 mg/l BOD_5 and 39 mg/l suspended solids. Henderson (1979) also indicated similar improvement in effluent quality with the use of fish, and attributed such improvement to the absence of algal growth. Information on the removal of heavy metals, pathogens, and trace organics from combined aquaculture systems based on fish or fixed films is not available.

Excellent removal of nitrogen by water hyacinths and duckweeds has been well documented. In addition, these plants are known to accumulate phosphorus and a number of heavy metals. It has been well established that the primary function of water hyacinths is suppression of algal growth by blocking sunlight, taking up nutrients for growth, physically filtering solids with their extensive root system, and supporting active biota in the root system. Wolverton (1979) noted that the rate of BOD or suspended solids removal in hyacinth basins is not strictly a function of growth and harvesting rates, whereas the rates of nitrogen and phosphorus

removal are dependent upon growth and harvesting rate. Stewart (1979) found that water hyacinths grow exponentially with time, and he used the Michaelis-Menten kinetic equation to correlate the growth rate with limiting nutrient concentration.

Due to the lack of long-term experience with the combined aquaculture systems described herein, data on sludge accumulation and its effects on system performance are not available at the present time.

System Products

Any wastewater management system is complete only with proper disposal or utilization of residue by-products. This aspect may be of great importance for aquaculture systems because many of them have potential for generating large quantities of such by-products. Table 3 shows production data for various species of fish grown in wastewater lagoons, as obtained by Stowell, et al. (1979). Here, the term biomass refers to the total amount of fish present in a system at some time and the term production (or yield) means the change in biomass over a given time. Wide variations in fish production are indicated, which might be caused by differences in the amount of fish initially stocked and prevailing environmental conditions in the culture unit.

Analytical results of metal and chlorinated hydrocarbon contents of fathead minnows cultured in wastewater lagoons, obtained by Trimberger (1972), are shown in Table 4. Some of them were in high concentrations, but he indicated that results were similar to those obtained in fish from nearby natural waters. Henderson (1979) also analyzed the flesh of fish grown in stabilized wastewater for pesticides, heavy metals, and pathogens commonly existing in wastewaters and found that the contaminant

TABLE 3. SUMMARY OF PRODUCTION DATA FOR FISH CULTURED IN WASTEWATER LAGOONS (Colt, et al., 1979)

Species	Biomass (dry) kg/ha	Production (dry) kg/ha.d	Production (dry) kg/ha.yr	% H_2O	Location	Season	Notes and Comments
Channel Catfish			126	67	Arizona		Tertiary treatment ponds, not fed
Channel Catfish	256		218	67	Oklahoma	May - Oct	Wastewater lagoons
Raibow Trout	0	0	0		Arizona		Tertiary treatment ponds, not fed. Total mortality due to ammonia toxicity and low dissolved oxygen.
Coho Salmon Chinook Salmon		0 - 2	0 - 58	71	N. Calif.		In ponds receiving wastewater (67 percent wastewater, 33 percent seawater). Based on the growth of juveniles only.
Carp			175	75	Germany		Sewage ponds, no feeding
Carp			50 - 150	75	England		Sewage ponds, no feeding
Nile Tilapia	16.3		16	78	Oklahoma	May - Oct	Wastewater lagoons, mortality due to low temperature
Java Tilapia			4,400	78	Tenn.		Sewage oxidation ponds, projection based on maintenance of optimum temperature, may require aeration and nitrogen removal
Chinese Carp			682	74	Arkansas	Aug - Dec	Sewage oxidation ponds, mortality due to low temperature
Chub Perch Roach			118 - 238	75	England	all year	Sewage oxidation ponds

TABLE 4. METAL AND CHLORINATED HYDROCARBON CONTENTS OF FATHEAT MINNOWS GROWN IN STABILIZED WASTEWATER [1]

(Trimberger, 1972)

Metals	Amount mg/kg Wet Weight
Arsenic	0.5
Cadmium	0.1
Mercury	0.15
Lead	1.0
Zinc	48.0
Copper	0.5
Chrome (Hexavalent)	0.1
Nickel	0.2
Chlorinated Hydrocarbons	
PCB[2]	0.84
DDT	0.238

[1] Analysis made on Gas Chromatograph.

[2] Measured as Aroclor 1254.

levels of those examined were all below the action guidelines established by FDA or the Arkansas Department of Health.

Suggested utilization of fish products from wastewater aquaculture systems include direct human consumption, animal feed, and extraction of protein. However, due to potential public health hazards and problems associated with consumer acceptance, the use of these products for human consumption may not be realized in the foreseeable future. The technical and economic feasibility of protein extraction has yet to be demonstrated, and marketability of the products as animal feed or raw material for pet food production needs to be carefully examined. Unless an economic means of by-product utilization is found, they should be considered as a liability, requiring proper disposal.

CONCLUSIONS AND RECOMMENDATIONS

The combined aquaculture systems reviewed here are all still in the exploratory or developmental stage and, as such, are not ready for routine use. Combined aquaculture systems such as those involving higher forms of animals are generally less attractive than their aquatic counterpart. Nonetheless, they may find some wastewater treatment applications particularly where use of a aquatic plant such as water hyacinth is limited due to climatic or other constraints.

Aquaculture systems consisting of conventional stabilization ponds followed by fish culture ponds have shown to be capable of consistently producing secondary or advanced secondary quality effluent. However, data on species-specific removal rates and inital fish stocking

requirements under different environmental and wastewater conditions are still lacking, and rational design criteria need to be developed by which the overall cost effectiveness of such systems can be determined. These systems warrant additional developmental efforts oriented toward developing such information.

The fixed film system discussed herein combines some unique approaches to biological wastewater treatment with possible use of aquatic plants or fish. Pilot studies indicate high levels of treatment efficiencies on municipal wastewater. The first full scale system is going in service early in 1980 and results from this plant should yield more definitive information on performance and cost effectiveness.

One major concern with virtually all combined aquaculture systems is the utilization/disposal of system products, i.e., the plants or fish. Harvesting techniques, particularly for fish, are not well developed and good cost data are very limited. The ultimate utilization/disposal of harvested biomass has not given much attention, but may prove to be a critical factor in the successful application of these systems. Simplistic answers such as by-product recovery and composting may prove technically or economically unattractive in many locations. The presence of heavy metals, for example, may prevent utilization as a soil conditioner. Even without such technical impediments, there may be little market for compost or other by-products. Clearly, major research and development emphasis needs to be placed on the utilization/disposal of biomass from combined aquaculture systems.

REFERENCES

1. Bagnall, L. O. (1979). Resource Recovery from Wastewater Aquaculture, paper presented at the Seminar on Aquaculture Systems for Wastewater Treatment, University of California at Davis, September, 1979.

2. Benemann, J. R. (1979). Energy from Wastewater Aquaculture Systems, paper presented at the Seminar on Aquaculture Systems for Wastewater Treatment, University of California at Davis, September, 1979.

3. Carpenter, et al. (1976). Aquaculture as an Alternative Wastewater Treatment System, in Biological Control of Water Pollution, Tourvier, J. and Pierson, R. W., Jr. editors, University of Pennsylvania, Philadephia, PA, pp. 215-224.

4. Coleman, M. S., et al. (1974). Aquaculture as a Means to Achieve Effluent Standards, in Wastewater Use in the Production of Food and Fiber, EPA-660/2-74-041, U.S. Environmental Protection Agency, pp. 199-214.

5. Colt, J., et al. (1979). The Use and Potential of Aquatic Species for Wastewater Treatment, Appendix B - The Environmental Requirements of Fish, University of California at Davis, California.

6. Crites, R. W. (1979). Economics of Aquatic Treatment Systems, paper presented at the Seminar on Aquaculture Systems for Wastewater Treatment, University of California at Davis, September, 1979.

7. Dinges, R. (1976). A Proposed Integrated Biological Wastewater Treatment System, in Biological Control of Water Pollution, Tourbier, J. and Pierson, R. W., Jr. editors, University of Pennsylvania, Philadelphia, PA, pp. 225-230.

8. Dinges, R. (1979). Development of Hyacinth Wastewater Treatment Systems in Texas, paper presented at the Seminar on Aquaculture Systems for Wastewater Treatment, University of California at Davis, September, 1979.

9. Duffer, W. R., and Moyer, J. E. (1978). Municipal Wastewater Aquaculture, EPA-600/2-78-110, U.S. Environmental Protection Agency, Ada, Oklahoma.

10. Goldman, J. C., and Ryther, J. H. (1976). Waste Reclamation in an Integrated Food Chain System, in Biological Control of Water Pollution, Tourbier, J. and Pierson, R.W., Jr. editors, University of Pennsylvania, Philadelphia, PA, pp. 197-214.

11. Henderson, S. (1979). Utilization of Silver and Bighead Carp for Water Quality Improvement, paper presented on the Seminar on Aquaculture Systems for Wastewater Treatment, University of California at Davis, September, 1979.

12. Hinde Engineering Company (undated). Little Fish Big Help in Sewage Treatment, Reprint for Hinde Engineering Company, Highland Park, IL.

13. Las Virgenes Municipal Water District (1973). Tertiary Treatment With a Controlled Ecological System, EPA-660/2-73-022, U.S. Environmental Protection Agency.

14. Ryther, J. H. (1979). Treated Sewage Effluent as a Nutrient Source for Marine polyculture, paper presented at the Seminar on Aquaculture Systems for Wastewater Treatment, University of California at Davis, September, 1979.

15. Serfling, S. A., and Alsten, C. (1978). An integrated Controlled Environmental Aquaculture Lagoon Process for Secondary or Advanced Wastewater Treatment, paper presented at the Conference on Performance and Upgrading of Waste Stabilization Ponds, Utah State University, Logan, Utah, August 23-25, 1978.

16. Serfling, S. A., and Mendola, D. M. (1979). The Solar AquaCell AWT Lagoon System for the City of Hercules, California, paper presented at the American Water Works Association Conference on Wastewater Reuse, March 1979, Washington, DC.

17. Stewart, E. A., III (1979). Utilization of Water Hyacinths for Control of Nutrients in Domestic Wastewater - Lakeland, Florida, paper presented at the Seminar on Aquaculture Systems for Wastewater Treatment, University of California at Davis, September, 1979.

18. Stewart, W. C., and Serfling, S. A. (1979). The Solar AquaCell System for Primary, Secondary or Advanced Treatment of Wastewaters, paper presented at the Seminary on Aquaculture System for Wastewater Treatment, University of California at Davis, September, 1979.

19. Stewart, W. C., et al. (1979). Pilot Studies of the Solar AquaCell Controlled Aquaculture Process for Wastewater Reclamation, paper presented at the American Water Works Associates Conference on Wastewater Reuse, March, 1979, Washington, DC.

20. Stowell, R., et al. (1979). The Use of Aquatic Plants and Animals for the Treatment of Wastewater, University of California at Davis, California.

21. Trimberger, J. (1972). Production of Fathead Minnows (Pimephales promelas) in a Municipal Wastewater Stabilization System. Michigan Department of Natural Resources, Fisheries Division, Grand Rapids, Michigan.

22. Wolverton, B. C. (1979). Engineering Design Data for Small Vascular Aquatic Plant Wastewater Treatment Systems, paper presented at the Seminar on Aquaculture Systems for Wastewater Treatment, University of California at Davis, September, 1979.

23. Wolverton, B. C., and McDonald, R. C. (1979A). The Water Hyacinth: from Prolific Pest to Potential Provider, AMBIO, Vol. 8(1), pp. 2-10.

24. Wolverton, B. C., and McDonald, R. C. (1979B). Upgrading Facultative Wastewater Lagoons with Vascular Aquatic Plants, Journal Water Pollution Control Federation, Vol. 51(2), pp. 305-313.

COMBINED AQUACULTURE SYSTEMS FOR WASTEWATER TREATMENT IN COLD CLIMATES AN ENGINEERING ASSESSMENT

Edward R. Pershe

INTRODUCTION

The Clean Water Act as amended in 1977 (PL 95-217) encourages the use of innovative and alternative technologies for the reclamation of wastewater. Furthermore, it specifies that grants for conventional treatment works construction shall not be made unless the grant applicant has satisfactorily demonstrated that innovative and alternative treatment processes have been fully studied and evaluated.

During the past decade alternative processes utilizing land application methodology have been proposed for the treatment and utilization of wastewater. These processes have, in general, proved to be successful, however, they were adopted for wastewater treatment purposes only after they were adequately field tested and suitable design criteria were developed.

The purpose of this assessment is to highlight some of the more important aspects of combined aquaculture systems and to evaluate their merit for use in cold climates. Much of the assessment is based on presentations that were made at a seminar held on the campus of the University of California at Davis in September 1979.

ASSESSMENT OF AQUACULTURE SYSTEMS

In general, aquaculture appears useful as a wastewater treatment tool, however, this treatment technology has many gaps that need to be filled in before it can be used reliably for engineered design. The use of water hyacinths, duckweeds and other aquatic vascular plants is really limited to only tropical and warm-temperate climates if unprotected, year-round treatment by these means is proposed. In recent years, surges of freezing cold weather have penetrated deep into the South making even much of Florida inhospitable to year-round usage of aquaculture.

Removal of BOD, suspended solids and nutrients is highly variable in aquaculture systems. While they may produce excellent effluents for long periods at a time, they may fail unexpectedly and be difficult to restore to their former efficiency in an acceptable time period. It appears doubtful whether the reliability of such systems can be increased to an acceptable level for design purposes without making them unduly large and land consumptive.

Aquatic processing units (APU) seem to be used to better advantage in treatment trains which are headed by primary/secondary treatment units. The effluents from these units have a more consistent quality and are much more treatable in an aquaculture environment because gross pollutants have been removed. In addition to making the aquatic lagoon setting esthetically unattractive, gross pollutants, such as grit, oil and grease, scum, and floatable and settleable

solids, interfere with natural treatment mechanisms and become the focal point of foul odors and undesirable predatory species.

Although fish are useful for mosquito vector control in aquaculture systems, their usage to enhance wastewater treatment or to improve effluent quality is dubious. In spite of the fact that some filter-feeding fish are capable of removing organisms or particulate matter that are microscopically sized, it is the soluble organic and nutrient components in the wastewater that must be removed to attain effective treatment or effluent quality. Because the practical aspect of developing fish culture for food supplies is stymied by public health considerations, it is doubtful whether polyculture systems can ever be cost effective in the United States. Fish farming has been successfully demonstrated, but aside from the need to have adequate oxygen levels and a balance of upper and bottom filter-feeding fish present in the systems, no hard and fast guidelines are available as yet.

In the area of operation and maintenance of aquaculture systems, much still remains to be known. Odor, insect and other nuisance conditions may develop or occur for inexplicable reasons. Harvesting and disposal of biomass and sludge still presents a problem, however, it may prove to be less intractable to engineering solution than other problems. Unplanned after-development of numerous species of plants

and animals in aquaculture systems raises concern about such systems evolving into wild or mongrel-like facilities which could readily lose their treatment effectiveness.

In addition, the use of recirculation to enhance treatment and alleviate septic conditions has not been fully exploited nor has much attention been given to safeguarding the systems and rejuvenating or restoring them in case there is a wipeout of aquatic plants and animals by toxic wastes, disease, or unforseen climatic conditions. It may be possible to reduce the effects of a wipeout by always keeping a stock supply of aquatic plants and animals on hand, however, this would be expensive to maintain and unless the problem was one of non-recurring nature, a second wipeout could follow with disastrous consequences.

The so-called "solar aquacell" type system offers a protective environment to aquatic plants and a means for transferring solar heat energy from the contained atmosphere of the system to the liquid mass. However, in spite of the 3-phase treatment given to the wastewater, very little increased benefit is derived from the process and many questions still unresolved must await solution until the prototype installation is constructed.

In short, it is much too early at this time to attempt to prescribe any guidelines or criteria that would be useful for designing a reliable aquaculture system. The main unresolved question is the susceptibility of these systems

to function under a wide number of variables, and the element of risk that would be incurred. At the present time, enough is known about the performance of such systems so that an enterprising designer can probably develop a reasonably efficient pilot facility, which given diligent and fastidious care, might work for some time, perhaps even flawlessly.

But this is not the realistic situation and is highly unlikely to occur. In the full-scale plant operation, fastidious care is more likely to become simply routine maintenance having concomitant shortcomings. It would be prudent, therefore, to develop and verify any design criteria or guidelines by first conducting a pilot study at the intended location for the facility. Such a study, at least at this time, should be conducted over a minimum period of two years.

SUMMARY AND RECOMMENDATIONS

It is evident from what has been learned so far that the use of aquaculture to obtain secondary treatment of wastewater has not developed or been studied sufficiently to enable even generally applicable design criteria to be formulated. Because some of the variables that affect system design are greatly influenced by site-specific conditions, it may be that firm design criteria are not attainable practically, or for that matter, really desirable given the great difficulty that present conventional wastewater treatment plants experience in trying to achieve effluent standards. Perhaps the use of general guidelines coupled with long-term pilot studies at the proposed site is the best approach to attaining optimum system design.

On the other hand, the use of an aquatic processing unit as a polishing or tertiary process following some type of conventional secondary treatment plant, including stabilization or oxidation ponds, seems to offer much promise. Such units should be capable of consistently reducing BOD and suspended solids values to less than 10 mg/L. These systems could be used in northern parts of the U.S. during mild or growing seasons to produce high quality effluents for recharging groundwater aquifers or other reuse purposes. Their most beneficial usage would probably occur in resort areas which have high summer populations since they could provide low cost supplementary treatment to a secondary treatment plant being operated at high loading rates.

In regard to the quality of the influent that enters an aquaculture system, it should not be lower than primary effluent quality. The cheapest removals of BOD and suspended solids are obtained from the simple sedimentation process. Allowing grit, grease, scum and other floatable and settleable solids into an aquaculture system causes severe esthetic impacts and interferes with treatment mechanisms.

Fish-type polyculture should not be considered as an important component in the design of an aquaculture system for wastewater treatment. The development and management of such a system is dependent upon skills and expertise that are basically removed from and only incidental to wastewater treatment objectives.

At this time it does not appear to be feasible to provide protection for aquaculture systems so that they can be operated on a year-round basis in northern climates. There are no strong arguments to support this hypothesis. There is, of course, less sunshine during the winter months and the low ambient air temperature within an enclosure, together with the reduced amount of sunlight, would probably render aquatic plants less active toward pollutant removals.

In summary we can state that under proper conditions, the treatment efficiency of aquaculture systems should be comparable to secondary treatment. The reliability of these systems, on the other hand, is quite another thing; they are greatly affected by cold weather, their ability to handle hydraulic/organic shock loads is unknown, and their recovery

in the event of a plant/animal dieoff is probably too slow to make the installation risk acceptable.

In view of the above, it is recommended that large full-scale demonstration projects be used to obtain more reliable information about aquaculture systems rather than small pilot studies. The problem with the latter is that lavish attention is often focused on such studies and because of this inordinate surveillance, small flaws are readily detected and quickly corrected. Because aberrations never really get a chance to develop into significant problems which could affect the results of the study, a false sense of reliability and performance is generated. Thus, an unrealistic picture is portrayed about a system which is not true to life, and if followed as an example, might cause disastrous consequences.

The sites for the demonstration projects should be carefully chosen so that the results can be made applicable to any region of the coutnry.

TREATMENT ASPECTS OF AQUACULTURE SYSTEMS

An aquaculture system treating wastewater functions in a manner that is similar to a conventional wastewater treatment facility. Each is made up of individual unit operations which are selected to perform at optimum capability in a particular treatment train.

In a given aquaculture system, there may be one or more APU's following a pretreatment phase that may include primary or even secondary treatment. The degree of treatment given by the aquaculture portion of the overall system may be secondary or advanced. In the simplest system, the aquaculture units assume the full impact of the pollutional load and the APU's function first as primary treatment units, then as biological, and finally as clarification units. Organic and inorganic solids and newly created biomass are intended to remain within the system, decaying into mineralized constituents and simpler molecules which can be broken down. Such systems must be cleaned of sludge and biomass at intervals but the undertaking is not simple. In many cases; these simpler systems become overburdened and emit nuisance odors or other problem vectors.

Those aquaculture systems which have adequate pretreatment preceding them, receive a wastewater having more uniform quality and also free of gross pollutants. This wastewater is more easily treated in the system with fewer operational problems.

Selection of specific species of aquatic plants and animals to stock a given APU is dependent upon: (1) the characteristics of the wastewater, (2) the amount or type of pretreatment preceding the APU's, (3) the desired effluent quality, and (4) local climatic conditions. In combined aquaculture systems, additional components such as mechanical aerators, fish or benthic plants, may be utilized to further improve the quality of waste treatment or attain some other goal.

Management practices for APU's, in turn, are also related to the species selected. A major management problem has to do with biomass harvesting and disposal. Other operational considerations include using supplementary aeration and recirculation, selection of the best means of pretreatment to meet conditions, and maintenance of species support facities for restocking purposes.

As in the case of conventional wastewater treatment facilities, it is possible to have similar aquaculture systems treating the same type of wastewater in the same geographic area, and yet not achieve the same end result. In essence, the variations in aquaculture system designs may be as complex and intermixed with unit operations as in the case of conventional wastewater treatment systems, and the treatment results may be equally varied.

The principal mechanisms of wastewater pollutant removals in APU's are physical, chemical, and biological in nature - the same as those encountered in conventional treatment.

Where conventional pretreatment including settling is not provided, settleable solids are removed in the first APU unit. However, removal of very small particulates can also occur as the result of mechanical filtration as the wastewater passes through plant and root masses. In polyculture systems, removal of settled solids and plant forms is accomplished by means of grazing fish or other animal forms.

Biodegradable matter is removed by adsorption on substrate and plant surfaces, by decomposition or degradation through oxidative and reductive processes, and by bacterial and animal consumption or absorption. Heavy metals are removed by adsorption on plant surfaces, precipitation, and absorption by plants and animals.

In a certain sense, the mechanisms of removal may be more efficient in aquaculture systems than in conventional treatment systems because the living plant and animal network presents a mesh-like straining environment which seems to enhance removals. The principal difficulty in engineering or designing such systems lies in trying to determine how to ascribe the removals of pollutants to a particular mechanism or to different species of plants and animals. Symbiosis would also seem to play an important but difficult to define role in such systems.

DETAILS AND PERFORMANCE OF COMBINED AQUACULTURE SYSTEMS

The common type aquaculture system employs water hyacinth plants in a shallow lagoon to achieve wastewater treatment. Lately, considerable interest has been shown in modified aquaculture systems which employ some particular feature to enhance the quality of the effluent or obtain some other benefit. These modified systems, often times referred to as combined systems, employ such devices as supplementary aeration, polyculture or fish, etc.

Polyculture Systems

Stewart (1) studied a polyculture system consisting of three one-acre lagoons in series seeded with water hyacinth plants. Oxygen levels were always found to be high enough so that septic conditions did not develop. However, algae blooms developed in the last lagoon and contributed to lowered effluent quality.

Water hyacinths in the first pond grew to large size amidst a thriving fish population. Unusually high removals of phosphorus were attained which were attributed to uptake by mosquito larvae that later left the pond as adult mosquitoes. When mosquito vector control was instituted, the phosphorus level in the effluent increased from 0.6 mg/L to 6 mg/L.

Fish grew rapidly and appeared to favor residence in the second pond. Unlike the first pond, hyacinth roots were relatively clean and free of heavy bacterial slimes. Tadpoles and mollusks also developed in the second pond, however,

there was very little mosquito life. In the third pond, hyacinth plants became very chlorotic and required supplementary iron treatments.

During the summer months, the system consistently produced effluent values of 1.0 mg/L Total Nitrogen, 4 mg/L BOD, 2 mg/L Suspended Solids, and 0.2 to 3 mg/L Phosphorus. As in other studies, nutrient ratios in the wastewater were found to be unbalanced so that good phosphorus removals could not be attained. Other methods were advised if phosphorus removal was an important objective.

Henderson (2) studied silver carp (*Hypopthalmichthyes molitrix*) and bighead carp (*Aristichthyes nobilis*) as low trophic level filter feeders in fish production ponds. Silver and bighead carp feed on free-floating or free-swimming planktonic organisms as small as 4 microns in size, and can reach a size of 40 to 50 pounds in 4 to 5 years. Many finfish species ranging from the low esteemed carp to the muskellunge have thrived successfully in wastewater ponds converting various food forms and nutrients into fish flesh.

Settled wastewater at a state institution, consisting mainly of wastes from a laundry and food service facilities in addition to sanitary wastes, was fed to a 3-pond polyculture system with fish and also to a similar 3-pond stabilization system without fish. Each system was operated in series and had a total surface area of 12 acres. The wastewater fed to each system had a BOD of 260 mg/L and Suspended

Solids of 140 mg/L. The overall surface loading was 44 Kg/ha/day which is comparable to the loading of a stabilization pond designed to achieve secondary treatment.

The results of the study show that both systems produced effluents having very similar quality although the polyculture system appeared to consistently perform slightly better than the simple stabilization system. Over a 12-month period the effluent BOD of the polyculture system ranged from about 7 to 45 mg/L with values less than 15 mg/L obtained more than 50 percent of the time. Over the same period, the effluent BOD of the stabilization system ranged from 12 to 52 mg/L with values less than 23 mg/L obtained about 50 percent of the time.

On an annual basis, Henderson reported that the BOD of the effluent from the system without fish was 37.6 percent higher than the series which employed fish. This would appear to be an impressive improvement, however, it must be remembered that this calculation is based on comparing rather low figures to begin with, hence, the improvement is more illusionary than real. For example, if the effluent BOD of the the stabilization system is 12 mg/L and that of the polyculture system is 8 mg/L, the effluent of the stabilization system would calculate to be 50 percent higher than the polyculture system. While that is true, the actual difference between the two systems in this particular example is statistically meaningless.

Over a 12-month period, effluent suspended solids from the stabilization system ranged from about 9 to 110 mg/L with values less than 20 mg/L obtained 50 percent of the time. Effluent suspended solids for the polyculture system during that same period ranged from about 7 to 78 mg/L with values less than 20 mg/L obtained 50 percent of the time.

Henderson then studied a polyculture system using six ponds in series. The pond depths averaged 1.2 to 1.3 m and the flow through each pond was baffled to prevent short-circuiting. The influent flow rate of 0.45 MGD allowed a hydraulic residence time of 72 days. Ponds 1 and 2 served as stabilization and plankton culture ponds and were not stocked with fish. The remaining four ponds were stocked with silver and bighead carp. The overall loading rates on the system were 43.5 Kg/ha/day BOD and 20.4 Kg/ha/day Suspended Solids. These loadings are quite comparable to those used to design stabilization pond systems. During the first eight months of operation, the 6-pond system reduced BOD by about 96 percent and suspended solids by 86 percent. The effluent BOD ranged from about 4 to 17 mg/L with values less than 7 mg/L occurring 50 percent of the time. Values for the effluent suspended solids ranged from 3 to 31 mg/L with values exceeding 20 mg/L occurring more than 60 percent of the time.

Ryther (3) evaluated tertiary treatment of secondary treatment plant effluent in a marine aquaculture system at Woods Hole, Massachusetts, over a 2-year period. The effluent

was diluted in seawater and fed first to shellfish, including different species of oysters, clams and other shellfish, and then passed through a seaweed culture. It was found that the quality of the tertiary effluent fluctuated according to the quality of the secondary effluent. When the sewage treatment plant effluent had a bad quality, the tertiary system effluent was also poor. The seaweed culture, intended as a polishing step, frequently became infested with fouling organisms and had to be discarded.

It is apparent from the above studies of polyculture systems that much still remains to be done if these systems are to be made useful and reliable components for a wastewater treatment system. They do appear at times to yield good quality effluents as Henderson was able to demonstrate. However, the amount of improvement that is obtained over the treatment of a simple stabilization pond system is very small and hardly seems worth the extra effort, especially since the fish that are produced cannot be utilized for human food consumption. A comparison of the effluent quality values for polyculture and stabilization pond treatment of wastewater shows that there is very little difference in the pollutant parameter trends throughout the year. In the 6-pond polyculture system studied by Henderson, the amount of improvement that was obtained over the 3-pond polyculture system was not very appreciable and it is doubtful whether it would have been any better than a 6-pond stabilization system.

The use of marine polyculture systems to treat wastewater does not seem to offer much promise. The organisms used in such cultures appear to be too sensitive to the quality of the wastewater and as such are unable to survive even short-term periods of exposure to waste flows carrying high concentrations of pollutants.

Solar AquaCell

Stewart and Serfling (4) have devised a 3-phase aquaculture system which is protected from adverse climate conditions by means of coverings. In the first phase, wastes are treated anaerobically after which they pass through facultative and aerobic aquatic processing units before being filtered through sand and disinfected. Each of the aquatic processing units contains vertical strips of a plastic film which act as a substrate for bacterial films to grow on. One end of each bio-web strip is anchored at the bottom of the aquatic lagoon. This enables the film strip to act as a waste treating substrate throughout the total depth. Diffused air is used in the facultative and aerobic phases to aid the treatment process by providing oxygen and mixing.

The anaerobic phase is covered by a plastic sheet which floats on the surface while the aerobic phases are covered by a double polyethylene air inflated roof. Solar energy penetrates the covering, heating the air above these units and this ambient heat is captured and conducted to the lagoon liquor by means of mists generated by nozzles. In

addition, floating aquatic macrophytes, particularly water hyacinths and duckweeds, are used to provide treatment in the aerobic phases.

The authors of this process, which is marketed as the Solar AquaCell System, claim that this system can achieve advanced tertiary treatment very economically. Among the advantages that are claimed for the system are the following:

(1) The average operating temperature can be 12 to 17°C and still not adversely affect the system.

(2) The heat exchange system transfers solar heat in the air to the water phase and thereby increases the metabolic rates of plants and organisms.

(3) Macrophytes, such as duckweeds and water hyacinths, can be easily harvested and, presumably, easily disposed of.

(4) Low energy and maintenance costs.

In small-scale pilot testing, the anaerobic aquacell with a total hydraulic retention time of 14 hours was reported to have achieved an average BOD removal of 50 percent and suspended solids removal of 89 percent. The raw influent had median values of 218 mg/L and 248 mg/L, for BOD and Suspended Solids, respectively. With water hyacinths as the major plant component in the aerobic phases, it is claimed that BOD and Suspended Solids levels below 5 mg/L can be achieved within a 5-day retention time.

While the innovators of the Solar AquaCell system have made many claims and have conducted a small scale study to show how their system will perform, it is unclear from their presentation as to whether the results can be sustained in a full scale system and whether many subordinate operations, such as harvesting and disposing of macrophytes, can be handled as easily as they foresee. Many statements are made regarding the advantages and merits of the system, however, it is difficult to accept such blandishments without having supporting data from larger and more comprehensive studies. Among the questions that need to be answered are: (1) Is anaerobic treatment of weak wastewater, without adequate mixing and temperature control, preferable to simple stabilization pond treatment?, (2) Is methane production possible in such a system?, (3) If sand filtration is required after the aerobic phase, wouldn't a simple stabilization system followed by sand filtration be cheaper and just as effective?, and (4) Will enclosure of the aerobic phases limit the use of mechanical equipment for the removal of macrophytes and sludge?

Nutrient Removals

King (5) reported on studies that were made to assess the effect of wastewater storage on phosphorus and nitrogen removal. During the impoundment of wastewater in ponds and lagoons, significant permanent phosphorus reduction takes place by direct sorbtion onto bottom sediments, by precipitation with metals, and by incorporation into biological

tissue. All bottom sediments have a finite capacity to sorb phosphorus, however, the initial significant reduction in phosphorus content through benthic sorption will decline after the first two or three years as the bottom sediments become saturated with phosphorus. Thus, phosphorus sorption on bottom sediments in ponds cannot be relied upon as a long-term means of phosphorus removal.

In addition, the absence of significant precipitation of phosphorus and the limited ability of aquatic plants to remove phosphorus from wastewater signify that wastewater ponds offer little hope in being able to meet phosphorus discharge standards. It was estimated that if all the aquatic plants in a series of four stabilization ponds were harvested, the maximum removal of phophorus during the active summer period would be equal to a concentration of only one mg/L.

Nitrogen loss from wastewater storage or stabilization systems takes place primarily in the form of ammonia gas. During periods of elevated pH, ammonium ion is converted to free ammonia and the gas exits from the liquid phase at a rate that is determined by the degree of wind mixing and other factors. While nitrogen is also removed through uptake by plant and animal species, studies showed that less than 10 percent of the total nitrogen removed in a 4-pond serially operated system could be accounted for by plant harvest.

Long detention times in pond systems also allows oxidation of nitrogenous forms to the nitrate stage to take

place. Under occasional severe respiratory demands, nitrates may be reduced to nitrogen gas, however, supersaturated oxygen levels and maintanance of high pH throughout much of the warm season would tend to discourage denitrification.

In general, although stabilization ponds or aquaculture systems cannot remove phosphorus to any great extent, particularly after benthic sediments become saturated after a period of 2-3 years, they have been shown to be extremely efficient at stripping nitrogen from wastewater. Studies show that about 95 percent of the nitrogen can be removed if sufficient detention time is provided. If good phosphorus removals are desired, other methods such as chemical addition should be employed.

Energy Considerations

Benemann (6) believes that fuel produced from aquaculture biomass is a promising solar energy option. At the present time, use of aquatic biomass for animal feeds is restricted because of the potential hazard to public health if such animals are used for human consumption. It is believed that a long period of testing will be required before this option meets with acceptance.

Although the primary method of producing fuel from biomass would be through anaerobic digestion, there is practically little or no experience in disposing of aquatic biomass by this means. A number of uncertainties exist about the amount of biomass that can be produced by aquacul-

ture systems. While most of the assumptions about biomass digestion are drawn from wastewater sludge digestion experience, studies of anaerobic digestion of marsh and aquatic plants are still necessary because the higher ligno-cellulosic content of such plants may present significant problems. It may be possible to use a high rate digestion process to keep digester capacities low, however, current on-going studies suggest that this may not be feasible.

Benemann prefers that unconventional digestion facilities, such as landfills, covered anaerobic ponds, plug flow reactors, etc., be used instead of conventional sewage digesters. However, these methods also will require study and testing to determine their merits and feasibility.

In summary, the derivation of fuel from the anaerobic digestion of aquatic biomass is still in its embryonic stage. Because much is unknown about the quantity, nature, digestability and dewatering characteristics of biomass, as well as the quality and quantity of fuel that would be produced from it, it would be unwise to place any reliance upon biomass as a fuel source at this time.

REFERENCES

1. Stewart III, E.A. "Utilization of Water Hyacinths for Control of Nutrients in Domestic Wastewater at Lakeland, Florida." Presented at Seminar on Aquaculture Systems, University of California, Davis. Sept. 1979.

2. Henderson, S. "Utilization of Silver and Bighead Carp for Water Quality Improvement." Presented at Seminar on Aquaculture Systems, University of California, Davis. Sept. 1979.

3. Ryther, J.H. "Treated Sewage Effluent as a Nutrient Source for Marine Polyculture." Presented at Seminar on Aquaculture Systems, University of California, Davis. Sept. 1979.

4. Stewart, W.C. and Serfling, S.A. "The Solar AquaCell System for Primary, Secondary or Advanced Treatment of Wastewaters." Presented at Seminar on Aquaculture Systems, University of California, Davis. Sept. 1979.

5. King, D.L. "The Role of Ponds in Land Treatment of Wastewater." Reference source unknown.

6. Benemann, J.R. "Energy from Wastewater Aquaculture Systems." Presented at Seminar on Aquaculture Systems, University of California, Davis, Sept. 1979.

☆ U.S. GOVERNMENT PRINTING OFFICE: 1981—677-094/1130 Region No. 8